Max Flow

- In optimal paths, every arc has a length, cost, or value.
- Now, every arc has a width.

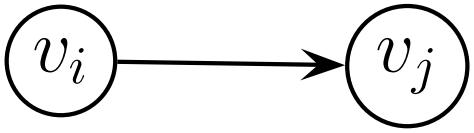

- $b_{i,j}$ is the amount of flow that can go from v_i to v_j.

Max Flow

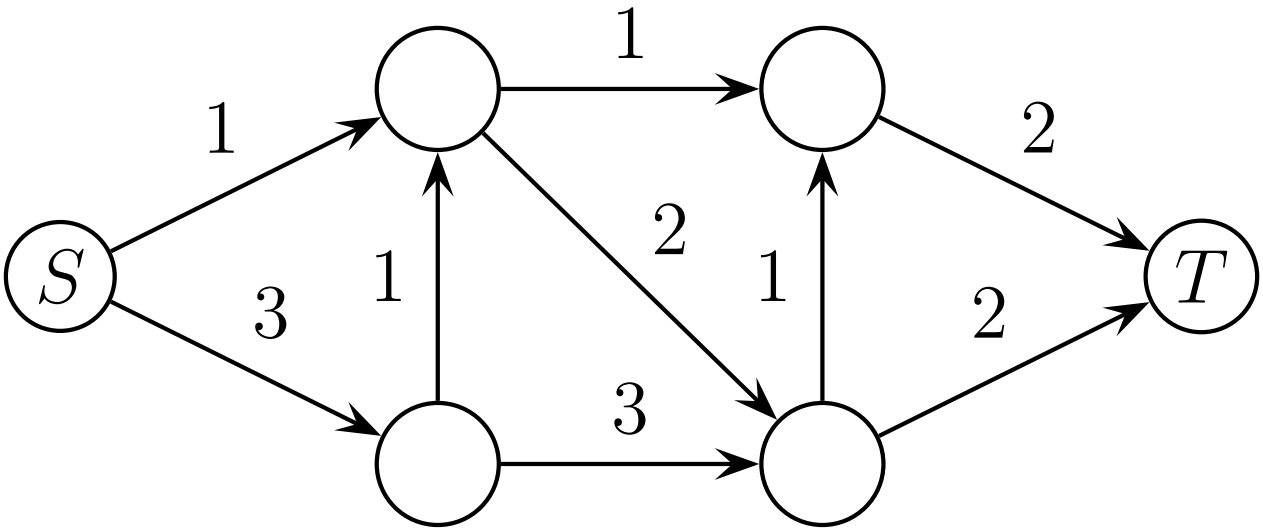

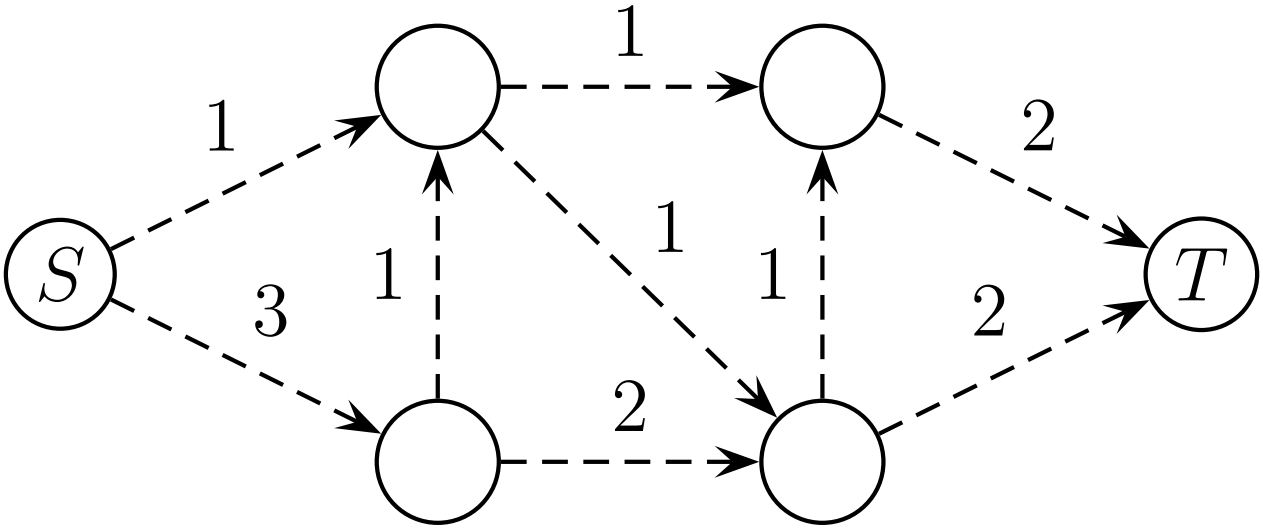

Max Matching

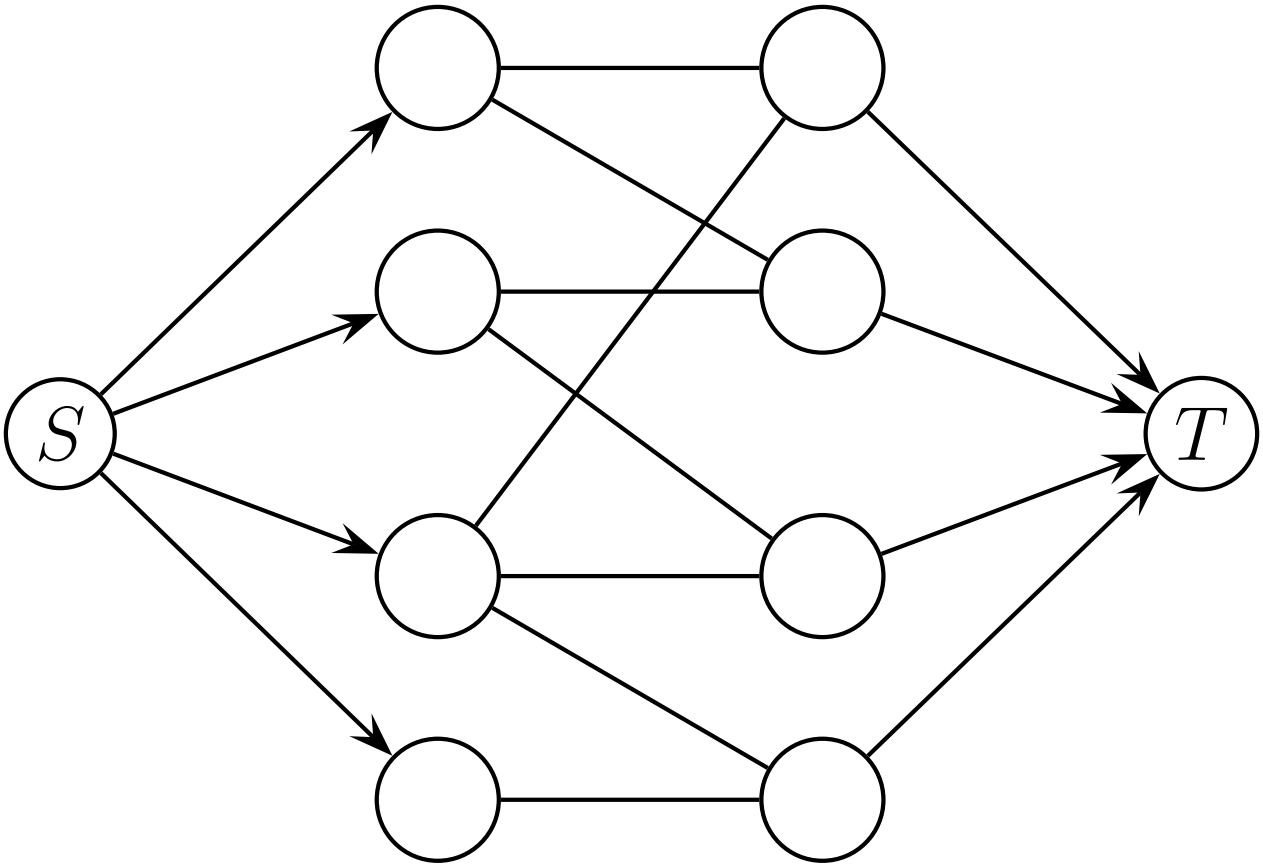

Ford Fulkerson

$$\max v = ?$$

$$\sum_i x_{i,j} - \sum_k x_{j,k} = \begin{cases} +v & j = s \\ 0 & j \neq s, t \\ -v & j = t \end{cases}$$

$$0 \leq x_{i,k} \leq b_{i,k}$$

Max flow algorithm

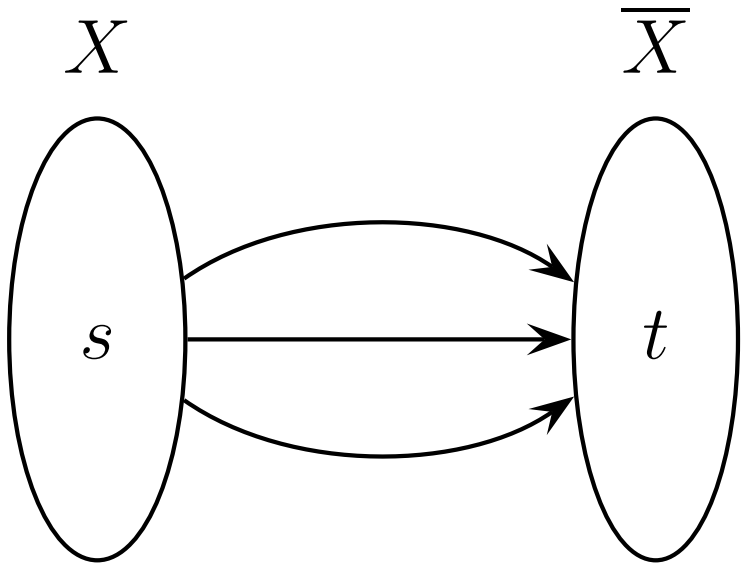

Capacity of a cut:

$$C\left[\, X, \overline{X} \,\right] = \sum_{i \in X, j \in \overline{X}} b_{i,j}$$

Labeling Process

Step 0. $v_s \in X$

Step 1. If $v_i \in X$ and $x_{i,j} < b_{i,j}$ then $v_j \in X$

Step 2. If $v_i \in X$ and $x_{j,i} > 0$ then $v_j \in X$

Max Flow

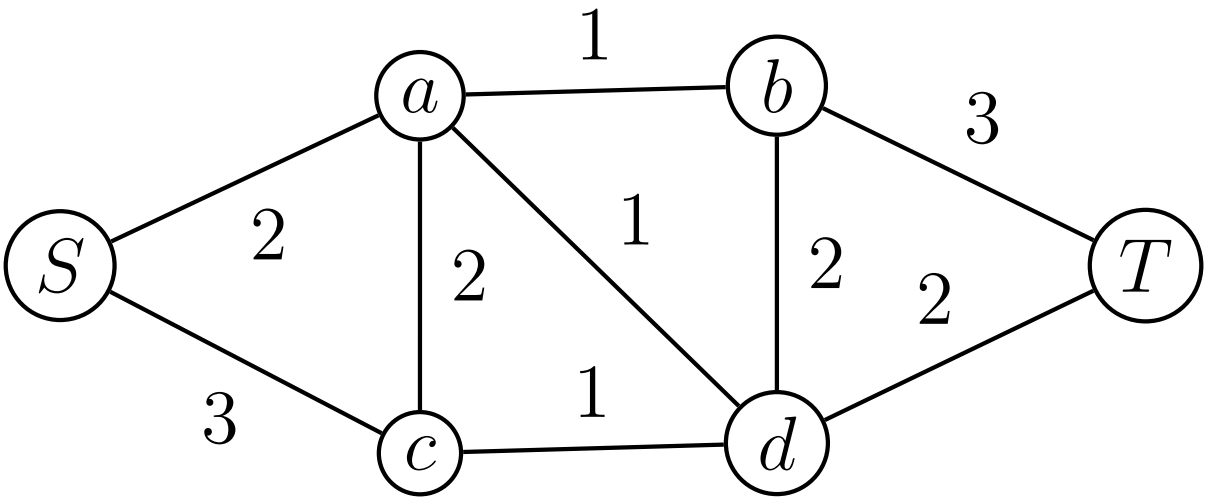

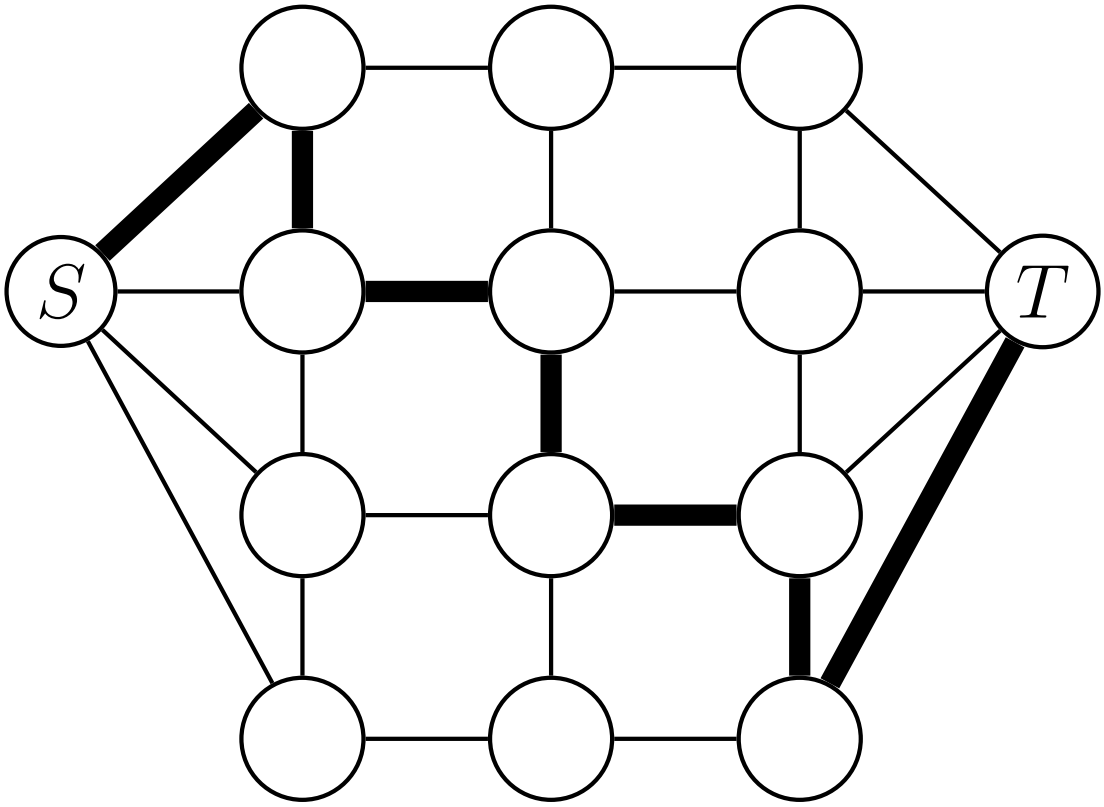

Multi-Terminal Max Flow

- Undirected edges only. i.e. $b_{i,j} = b_{j,i}$
- Given edge capacities

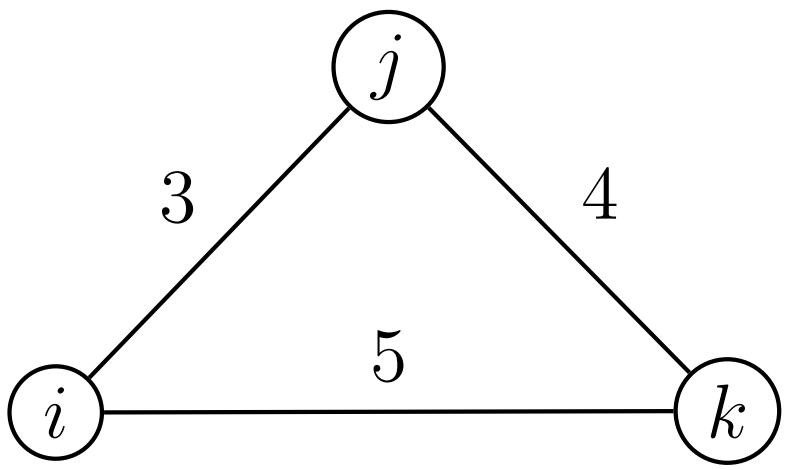

- Result of Max Flows

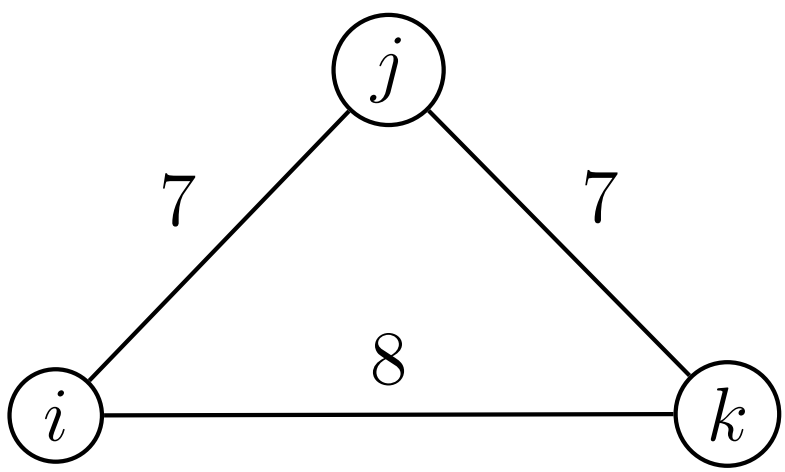

Max Flow

For any three nodes, $F_{i,j}, F_{j,k}, F_{i,k}$ satisfy
$$F_{i,k} \geq \min(F_{i,j}, F_{j,k})$$

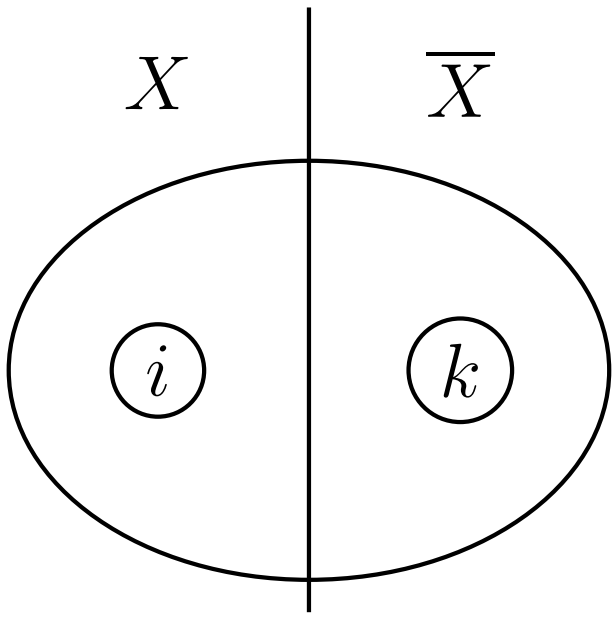

$$F_{i,k} = C[\ X, \overline{X}\ ]$$

Max Flow

- $F_{i,j} \geq \min(F_{i,k}, F_{k,j})$
- $F_{j,k} \geq \min(F_{j,i}, F_{i,k})$
- Among any three values, two values must be the same, and the third one is bigger or also the same value.

Representation of

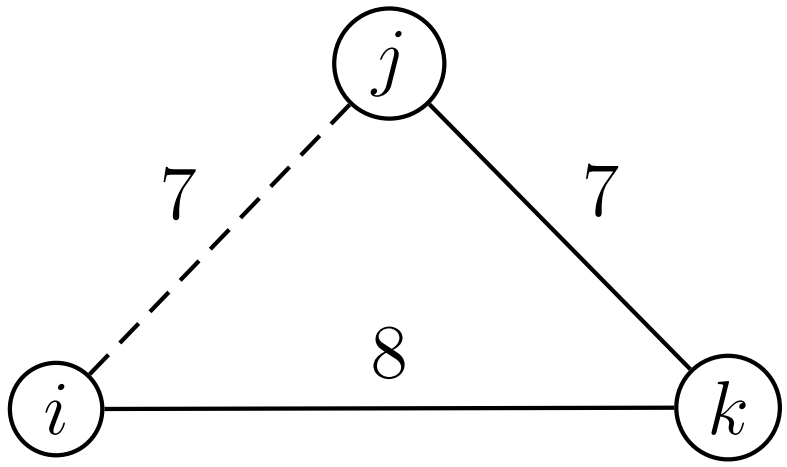

Given $n = 100$ - node network

$\binom{n}{2}$ Max Flows $= (n-1)$ Max Flows

Edge Capacities

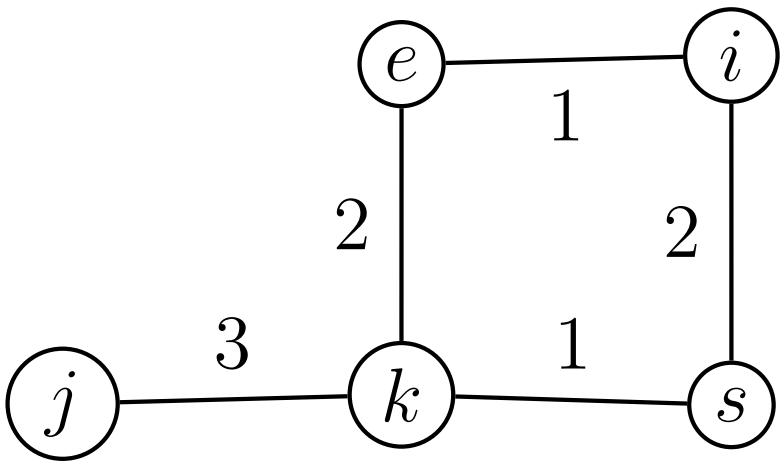

Result of Max Flows

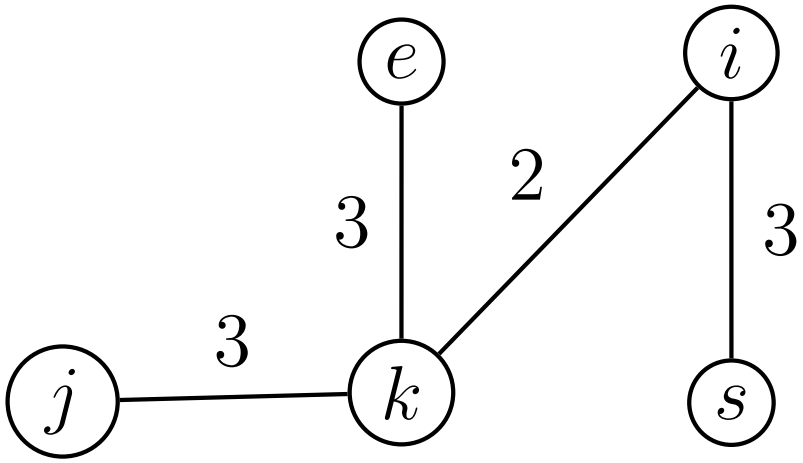

For any undirected network, there is a tree-shape network which has the same max flows and the same $n-1$ cut value.

Gomory-Hu cut tree

G - H tree

Not only flow - equivalent, but also cut equivalent.