CSE 20: Midterm 1 Solution

February 2, 2006—Day 8

Name: _____

Student ID:_____

No books and no calculators are allowed. One page of handwritten notes is allowed. If you need to make an assumption to solve a problem, state the assumption.

1. *2 pts.* How many negative 9-bit twos-complement numbers are there?

   (a) 512
   (b) 511
   (c) 256
   (d) 255
   (e) 128
   (f) 127
   (g) 0
   (h) 1

   Solution: (c) -256 is the minimum value that can be expressed. The minimum value a k-bit twos-complement number can express is $-2^{k-1} = -2^8 = -256$. Thus, there are 256 negative numbers.

2. *3 pts.* How many distinct combinations of inputs are there for an n-input Boolean function?

   (a) 2^n
   (b) 2^{2^n}
   (c) n^2
   (d) n^{2^n}
   (e) n

   Solution: (a) There are n inputs, each of which can independently take on 2 values. Thus, the total is $2 \cdot 2 \cdots 2 \cdot 2$ n times, or 2^n. Another way to look at it is that the truth table of a function with n inputs has 2^n rows, each of which is a distinct combination.

3. *3 pts.* How many distinct n-input Boolean functions are there?

   (a) 2^n
   (b) 2^{2^n}
   (c) n^2
   (d) n^{2^n}
   (e) n

   Solution: (b) There are 2^n rows in the truth table for a Boolean function that takes n inputs. Each row can independently take on one of two values. Thus, the total number of functions (each having a different setting of truth values for each row) is two to the number of rows, or 2^{2^n}.

4. *5 pts.* Circle each of the following sets that are uncountable:

   (a) Mersenne primes

   (b) Real numbers

   (c) Irrational numbers

   (d) The set of students who will score 200% on this exam

   (e) The set of all subsets of rational numbers

   Solution: The Mersenne primes are countable. Reals (b) and irrationals (c)are uncountable. There are no students who will score 200% on this exam, so that set is empty, and hence is countable. The set of all subsets of rational numbers (e) is the powerset of the rational numbers. The cardinality of the powerset of a set S is larger then the cardinality of S itself, since the set of rationals are countable, its powerset is uncountable.

5. *10 pts.* Use twos-complement 6-bit arithmetic to compute -5 - 22. Show your work.

   Solution:

   $5_{10} = 000101_2$

   $-5_{10} = 111010_2 + 1 = 111011_2$

   $22_{10} = 010110_2$

   $-22_{10} = 101001_2 + 1 = 101010_2$

   $-5 - 22 = -5 + -22$

   $111011_2 + 101010_2 = 100101_2$

   Check: $-100101_2 = 011010_2 + 1 = 011011_2 = 27$

6. *7 pts.* Convert 57260563_8 to hexadecimal.

   Solution: Convert to binary, rearrange into groups of four, and then convert back to hexadecimal.

$$\begin{aligned} 57260563_8 &= 101\ 111\ 010\ 110\ 000\ 101\ 110\ 011_2 \\ &= 1011\ 1101\ 0110\ 0001\ 0111\ 0011_2 \\ &= BD6173_{16} \end{aligned}$$

   The solution is $BD6173_{16}$.

7. *15 pts.* Design a boolean function (using the operators $\wedge, \vee$, and $\sim$) equal to S as defined by the following truth table:

p	q	r	S
0	0	0	1
0	0	1	0
0	1	0	1
0	1	1	0
1	0	0	1
1	0	1	1
1	1	0	0
1	1	1	0

Solution: We can use DNF form by creating a conjunct for each row where S is one:

$S = (\sim p \wedge \sim q \wedge \sim r) \vee (\sim p \wedge q \wedge \sim r) \vee (p \wedge \sim q \wedge \sim r) \vee (p \wedge \sim q \wedge r)$.

8. *15 pts.* Prove that if a, b, and c are integers for which $a|(b+c)$ and $a|b$, then $a|c$.

   Solution: Definition: For integers a, b, iff there exists an integer i such that $ai = b$, then $a|b$.

   Since $a|(b+c)$, there exists i such that $ai = b+c$. Since $a|b$, there exists j such that $aj = b$. Subtracting the latter equation from the former yields $a(i-j) = c$. Let $k = i - j$. Since i and j are integers, k is also an integer, since integers are closed under subtraction. Thus, since there exists an integer k such that $ak = c$, we can conclude that $a|c$.

9. *20 pts.* Given:

- predicates $I(x)$="x is wise" and $E(x,y)$="x knows y", and a
- domain $P = \{a,b,c\}$, and
- the truth set of $I(x)$ is $\{a\}$, and
- the truth set of $E(x,y)$ is $\{(a,a),(b,b),(c,c),(a,c),(a,b)\}$. [Remember that the truth set of a predicate is the set of elements in the domain that make the predicate true.]

Answer the following questions:

(a) What is the truth value of $\forall x \in P\ \exists y \in P : I(y) \to E(x,x)$?

Solution: A truth value is just the value true, or false. Some people answered with sets instead.

True, since $E(x,x)$ is true for all x.

(b) What is the truth value of $\exists y \in P : \forall x \in P\ \sim E(x,y) \vee \sim I(x)$

Solution: False, since $I(a)$ and there is no y such that $\sim E(a,y)$.

(c) What is the opposite (in English) of "everyone who is wise knows themselves"?

Solution: In predicate logic: $\forall x \in P\ I(x) \to E(x,x)$. Its opposite is $\exists x \in P : \sim (I(x) \to E(x,x))$, or, $\exists x \in P : I(x) \wedge \sim E(x,x)$. In English: Some wise people doesn't know him/herself.

Common incorrect answers: Every wise person doesn't know himself. Every non-wise person doesn't know himself.

(d) Convert the following from predicate logic to English: $\exists x \in P\ \forall y \in P : E(x,y) \to I(y)$.

Solution: Somebody only knows wise people.

Common incorrect answer: Somebody knows all wise people.

(e) Convert the following from English to predicate logic: anyone who knows everybody is wise.

Solution: The following three are all correct:

$$\forall x \in P(\forall y \in P\ I(x)) \to E(x,y)$$
$$\forall x \in P \exists y \in PE(x,y) \to I(x)$$
$$\forall x \in P \exists y \in P \sim E(x,y) \vee I(x)$$

Use the domain and truth sets from above to go through these answers, to see why they are true, and why your answer (if you didn't receive full credit) wasn't true for some value of x and y.

10. *20 pts.* Draw a combinatorial circuit containing only 1-input *not* and 2-input *or* gates that is equal to the following Boolean function (Note: make the circuit as simple as possible):

$$(p \wedge q \wedge r) \vee (\sim p \wedge q \wedge r) \vee (\sim p \wedge (\sim q \vee \sim r))$$

Solution: Simplify:

$$\begin{aligned}
(p \wedge q \wedge r) \vee (\sim p \wedge q \wedge r) \vee (\sim p \wedge (\sim q \vee \sim r)) = \\
[(q \wedge r) \wedge (p \vee \sim p)] \vee (\sim p \wedge ((q \wedge r) \vee (\sim q \vee \sim r))) = \\
(q \wedge r) \vee (\sim p \wedge ((q \wedge r) \vee (\sim q \vee \sim r))) = \\
(q \wedge r) \vee (\sim p \wedge ((q \wedge r) \vee \sim (q \wedge r))) = \\
(q \wedge r) \vee (\sim p)
\end{aligned}$$

Now, remove $\wedge$ using De'Morgan's law:

$$\begin{aligned}
(q \wedge r) \vee (\sim p) = \\
(\sim (\sim q \vee \sim r)) \vee (\sim p)
\end{aligned}$$

Here's the circuit:

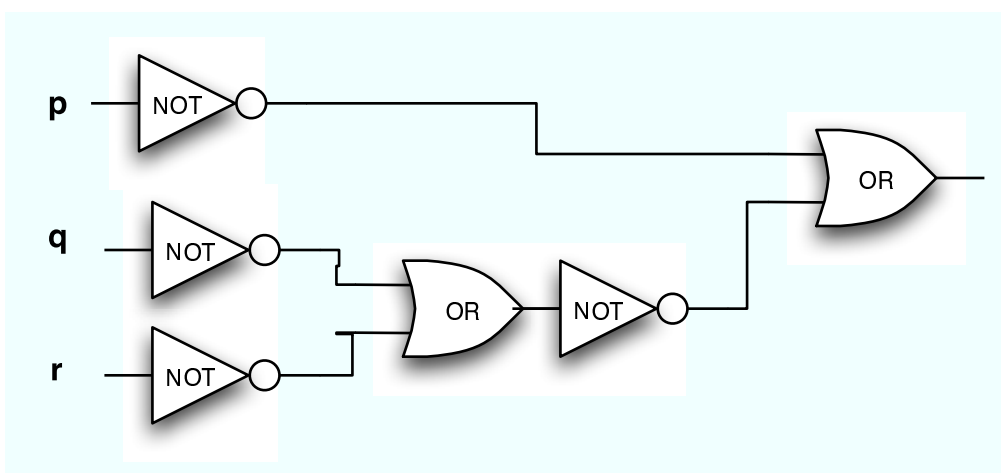

Alternatively, build a truth table. The first four rows are true and the last row is true. We can represent the first four rows as true with $\sim p$. The last row true represent with $p \wedge q \wedge r$. The result is a disjunction: $\sim p \vee (p \wedge q \wedge r)$. Remove ands with De'Morgan's law: $\sim p \vee \sim (\sim p \vee \sim q \vee \sim r)$.

11. *15 pts.* Extra credit. Prove the statement if true, otherwise find a counterexample:

    Given $x \neq 0$ is rational, if y is irrational, then the product xy is irrational.

    Solution:

    Given: $x \neq 0$ is rational.

    To prove: if y is irrational, then xy is irrational

    Definition: x is rational iff there are two integers, p and $q \neq 0$ such that $x = p/q$

    We'll prove the contrapositive: if xy is rational, then y is rational. If xy is rational, then there exist integers p and $q \neq 0$ such that $xy = p/q$. Since $x \neq 0$, we can rewrite the equation as $y = p/qx$. But, since p is an integer, and qx is a non-zero integer, y is rational. Thus, we've proven the contrapositive, and hence proven that if y is irrational, then xy is irrational.