CSE 140, Lecture 2
Combinational Logic

CK Cheng

CSE Dept.

UC San Diego

Combinational Logic Outlines

1. Introduction
   - Scope
   - Boolean Algebra (Review)
     - Definition
     - Duality
     - AND/OR Gates
     - Expressions vs Circuits
   - Handy Tools
     - DeMorgan's Theorem
     - Consensus Theorem
     - Shannon's Expansion
2. Specification
3. Synthesis

1.1 Combinational Logic: Scope

- Description
  - Language: e.g. C Programming, Verilog, VHDL
  - Boolean algebra
  - Truth table: Powerful engineering tool
- Design
  - Schematic Diagram
  - Inputs, Gates, Nets, Outputs
- Goal
  - Validity: correctness, turnaround time
  - Performance: power, timing, cost
  - Testability: yield, diagnosis, robustness

Scope: Boolean algebra, switching algebra, logic

- Boolean Algebra: multiple-valued logic, i.e. each variable have multiple values.
- Switching Algebra: binary logic, i.e. each variable can be either 1 or 0.
- **Boolean Algebra ≠ Switching Algebra**

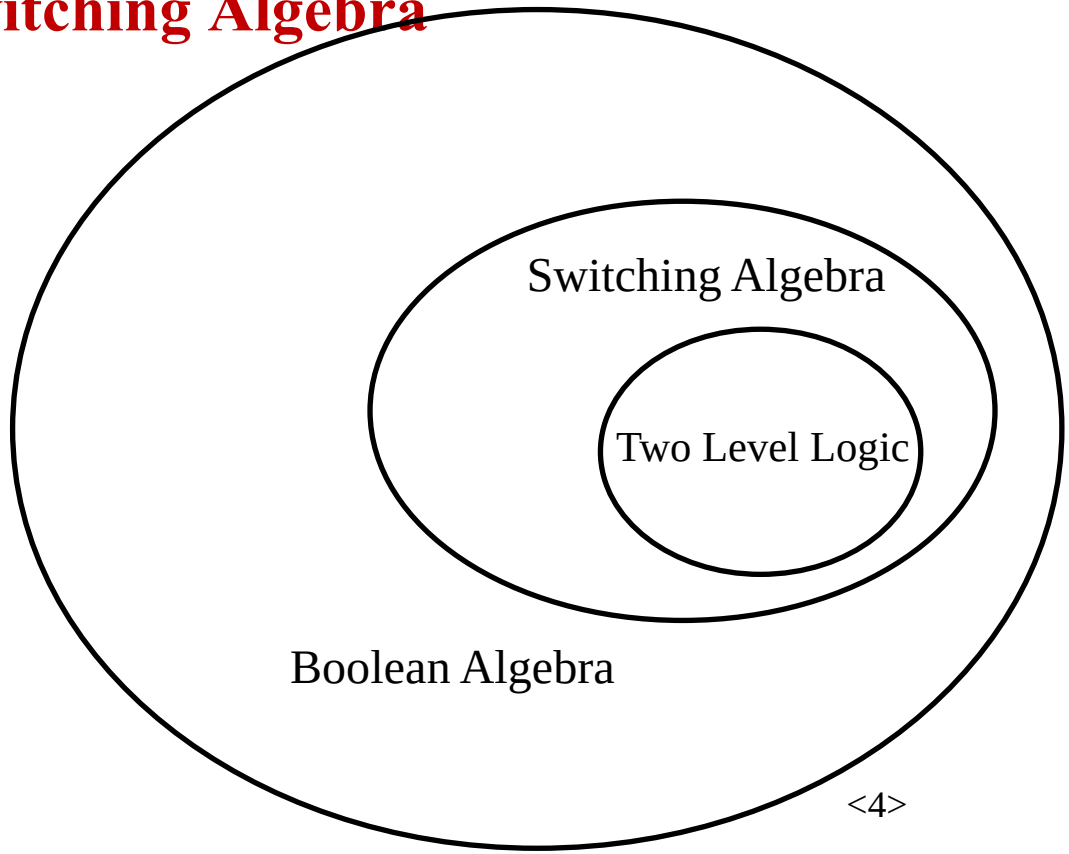

Scope: Switching Algebra (Binary Values)

- Typically consider only two discrete values:
  - 1's and 0's
  - 1, TRUE, HIGH
  - 0, FALSE, LOW
- 1 and 0 can be represented by specific voltage levels, rotating gears, fluid levels, etc.
- Digital circuits usually depend on specific voltage levels to represent 1 and 0
- *Bit*: *B*inary dig*it*

Copyright © 2007 Elsevier

Scope: Levels of Logic

- Multiple Level Logic: Many layers of two level logic with some inverters, e.g. (((a+bc)’+ab’)+b’c+c’d)’bc+c’e

  (A network of two level logic)
- Two Level Logic: Sum of products, or product of sums, e.g. ab + a’c + a’b’, (a’+c)(a+b’)(a+b+c’)

Features of Digital Logic Design

- Multiple Outputs
- Don’t care sets

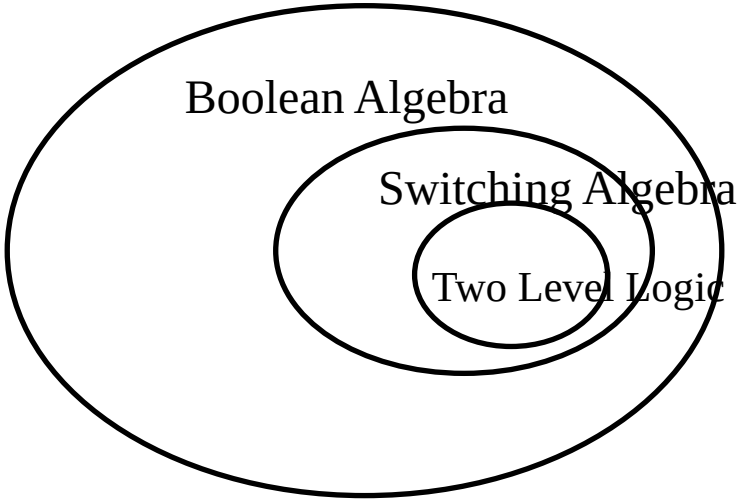

1.2 Boolean Algebra (Review)

George Boole, 1815-1864

- Born to working class parents: Son of a shoemaker
- Taught himself mathematics and joined the faculty of Queen's College in Ireland.
- Wrote *An Investigation of the Laws of Thought* (1854): systematize Aristotle's logic
- Introduced binary variables
- Introduced the three fundamental logic operations: AND, OR, and NOT.

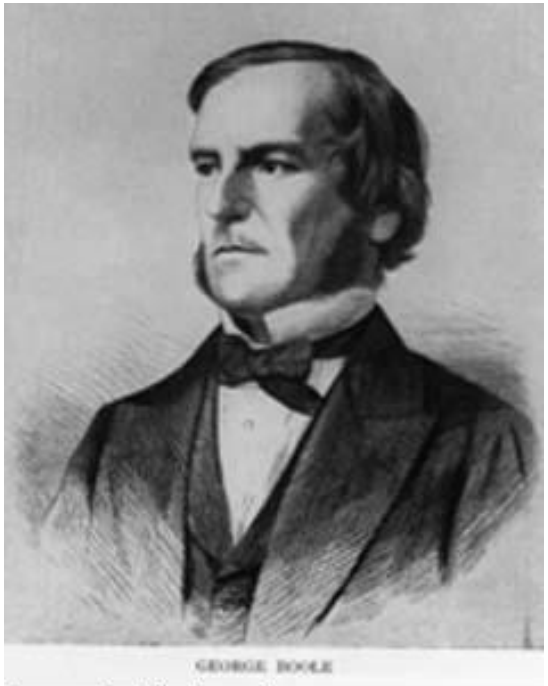

Scanned at the American Institute of Physics

Copyright © 2007 Elsevier

Review of Boolean Algebra

Let B be a nonempty set with two 2-input operations, a 1-input operation ` (complement), and two distinct elements 0 and 1. Then B is called a Boolean algebra if the following axioms hold.

- Associative laws: $(a+b)+c=a+(b+c)$, $(a\cdot b)\cdot c=a\cdot(b\cdot c)$
- Commutative laws: $a+b=b+a$, $a\cdot b=b\cdot a$
- Distributive laws: $a+(b\cdot c)=(a+b)\cdot(a+c)$,
  $a\cdot(b+c)=a\cdot b+a\cdot c$
- Identity laws: $a+0=a$, $a\cdot 1=a$
- Complement laws: $a+a'=1$, $a\cdot a'=0$

Review of Boolean Algebra: Duality

Associative laws	$(a+b)+c=a+(b+c)$	$(a\cdot b)\cdot c=a\cdot(b\cdot c)$
Commutative laws	$a+b=b+a$	$a\cdot b=b\cdot a$
Distributive laws	$a+(b\cdot c)=(a+b)\cdot(a+c)$	$a\cdot(b+c)=a\cdot b+a\cdot c$
Identity laws	$a+0=a$	$a\cdot 1=a$
Complement laws	$a+a'=1$	$a\cdot a'=0$

Duality: We swap all operators between (+,.) and interchange all elements between (0,1).

For a theorem if the statement can be proven with the laws of Boolean algebra, then the duality of the statement is also true.

1.3 Switching functions: Operators and Digital Logic Gates

id	A	B	Y
0	0	0	0
1	0	1	0
2	1	0	0
3	1	1	1

AND
Y=AB

A	B	Y
0	0	0
0	1	1
1	0	1
1	1	1

OR
Y=A+B

A	Y
0	1
1	0

NOT
Y=A’

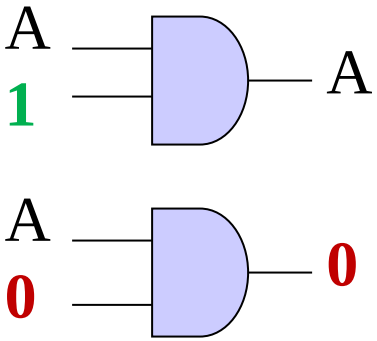

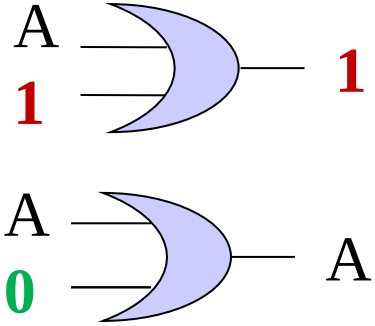

Input 0 dominates Y

0 blocks the output

1 passes signal A

Input 1 dominates Y

0 passes signal A

1 blocks the output

1.3 Switching functions: Operators and Digital Logic Gates

id	A	B	C	Y
0	0	0	0	0
1	0	0	1	0
2	0	1	0	0
3	0	1	1	0
4	1	0	0	0
5	1	0	1	0
6	1	1	0	0
7	1	1	1	1

AND

Y=ABC

0 blocks the output

1 passes signal A

For AND, only one row is true (minterm)

A	B	C	Y
0	0	0	0
0	0	1	1
0	1	0	1
0	1	1	1
1	0	0	1
1	0	1	1
1	1	0	1
1	1	1	1

OR

Y=A+B+C

0 passes signal A

1 blocks the output

For OR, only one row is false (maxterm)

1.3 Switching functions: Example on AND and OR

AND

id	A	B	C	Y
0	0	0	0	
1	0	0	1	
2	0	1	0	
3	0	1	1	
4	1	0	0	
5	1	0	1	
6	1	1	0	
7	1	1	1	

Y=A'B'C

OR

A	B	C	Y
0	0	0	
0	0	1	
0	1	0	
0	1	1	
1	0	0	
1	0	1	
1	1	0	
1	1	1	

Y=A'+B'+C

Switching Expressions vs Logic Diagrams

Switching expression is related to logic implementation

- Switching Expression: #literals, #operators
- Schematic Diagram: #gates, #nets, #pins

Laws and Logic Diagrams

Associativity Laws

(A+B) + C = A + (B+C)

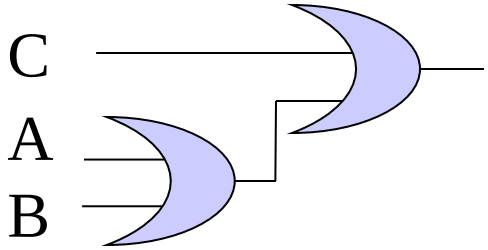

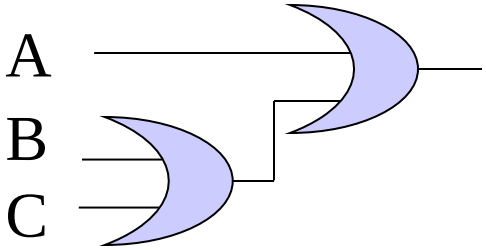

(AB)C = A(BC)

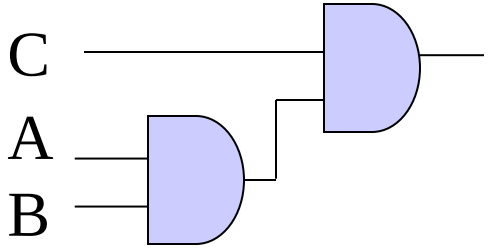

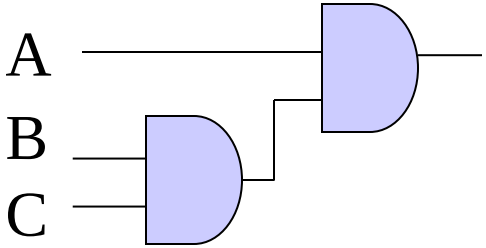

Laws and Logic Diagrams

Identity Laws $A \cdot 1 = A$ $A + 1 = 1$

$A \cdot 0 = 0$ $A + 0 = A$

Complement Laws $A + A' = 1$ $A \cdot A' = 0$

Distributive Laws

$A \cdot (B+C) = A \cdot B + A \cdot C$

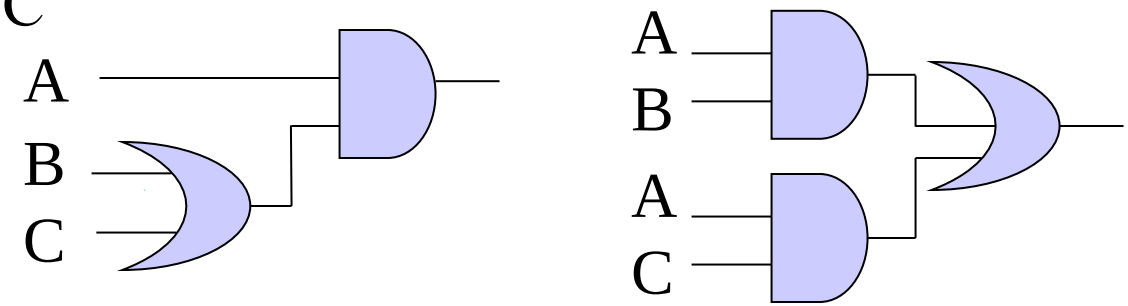

$A+B \cdot C = (A+B) \cdot (A+C)$

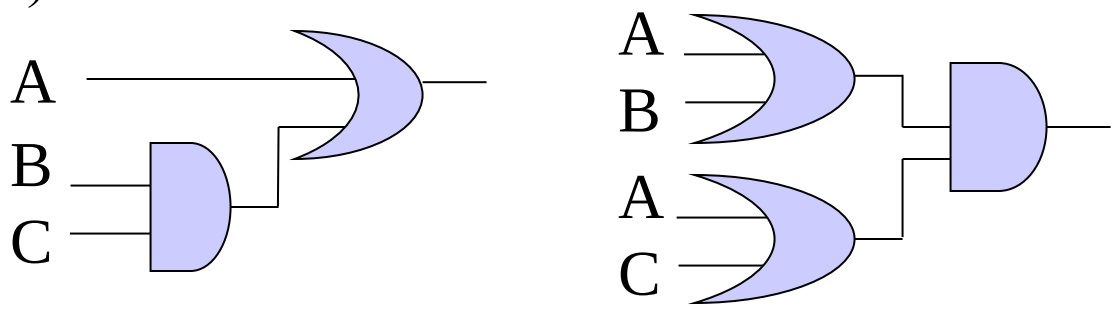

Switching Expression and Logic

Cost: #gates, #nets, #pins

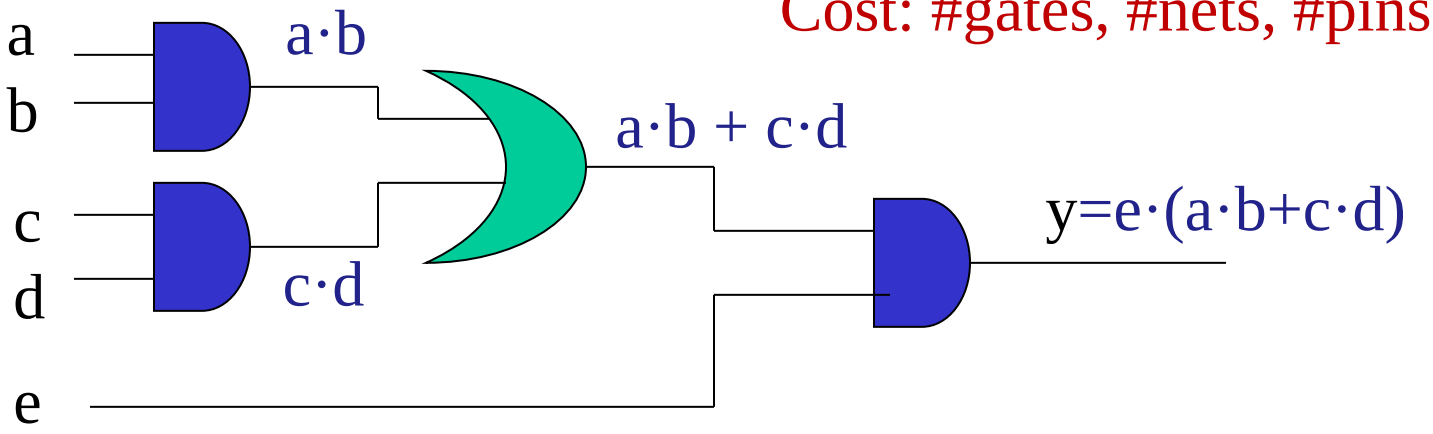

Schematic Diagram:
5 primary inputs
1 primary output
4 gates (3 ANDs, 1 OR)
9 signal nets
12 pins

Boolean Algebra:
5 variables
1 expression
4 operators (3 ANDs, 1 OR)
5 literals

Switching Expression and Logic

Schematic Diagram:

5 primary inputs

4 components (gates)

9 signal nets

12 pins

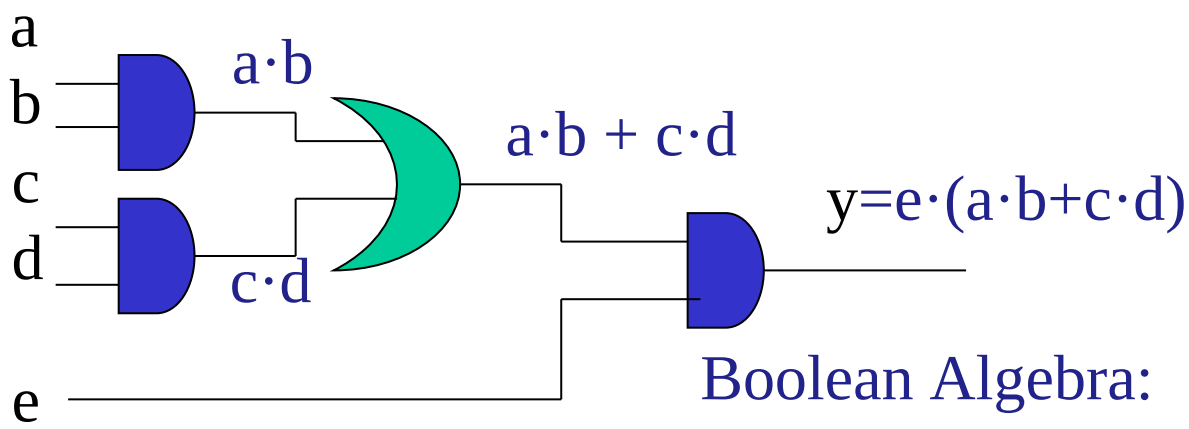

Boolean Algebra:

5 literals

4 operators

A. #inputs
B. #gates
C. #nets
D. #pins
E. None

I. #variables
II. #operators
III. #variables + #operators
IV. #literals + 2 #operators - 1

Example: f(a,b,c)= ab+a’c+a’b’

Example: $f(a,b,c)= (a'+c)(a+b')(a+b+c)$

1.4 Handy Tools

Boolean Algebra

- DeMorgan's Law: Complements
- Consensus Theorem

Switching Logic

- Shannon's Expansion
- Truth Table
- Karnaugh Map (single output, two level logic)

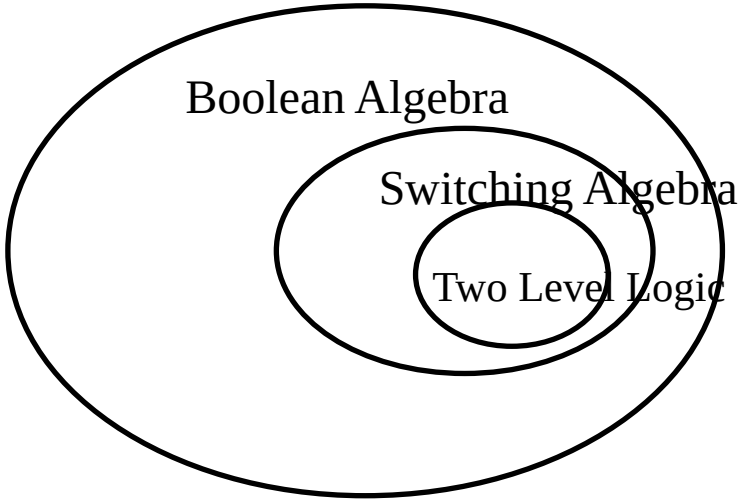

DeMorgan's Theorem and Digital Logic

T12. DeMorgan's Theorem (A+B)' = A'B' (AB)' = A' + B'

- $Y = (AB)' = A' + B'$

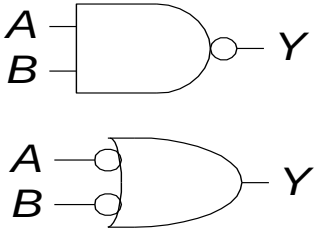

- $Y = (A + B)' = A'B'$

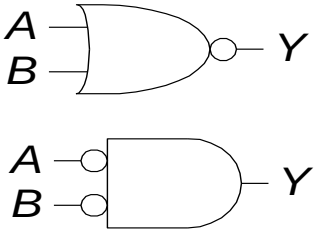

DeMorgan's Theorem: Bubble Pushing

- Pushing bubbles backward (from the output) or forward (from the inputs) changes the body of the gate from AND to OR or vice versa.
- Pushing a bubble from the output back to the inputs puts bubbles on all gate inputs.

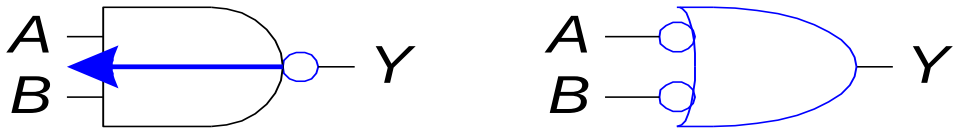

- Pushing bubbles on *all* gate inputs forward toward the output puts a bubble on the output and changes the gate body.

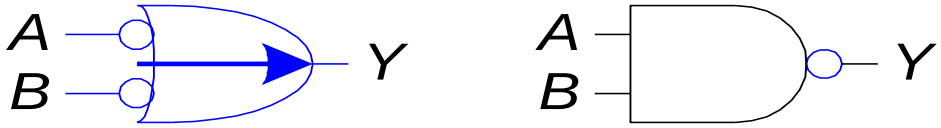

Consensus Theorem

- $AB+AC+B'C$
  $=AB+B'C$
- $(A+B)(A+C)(B'+C)$
  $=(A+B)(B'+C)$

The consensus of AB, B'C is: ?

Exercise: to prove the reduction using
(1) Venn Diagrams,
(2) Boolean algebra,
(3) Logic simulation and
(4) Shannon's expansion

Consensus Theorem: Venn Diagrams

AB+AC+B’C : AB+B’C

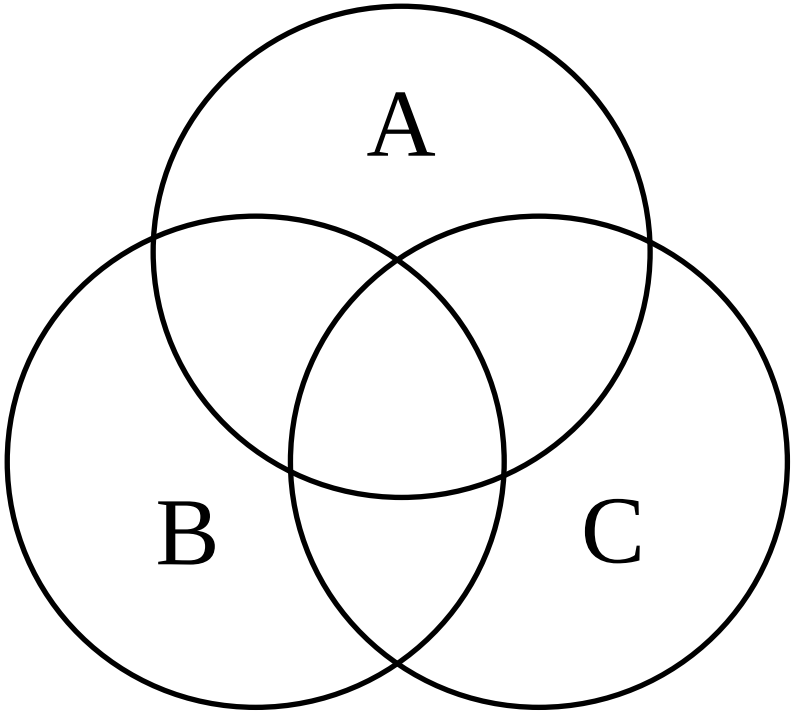

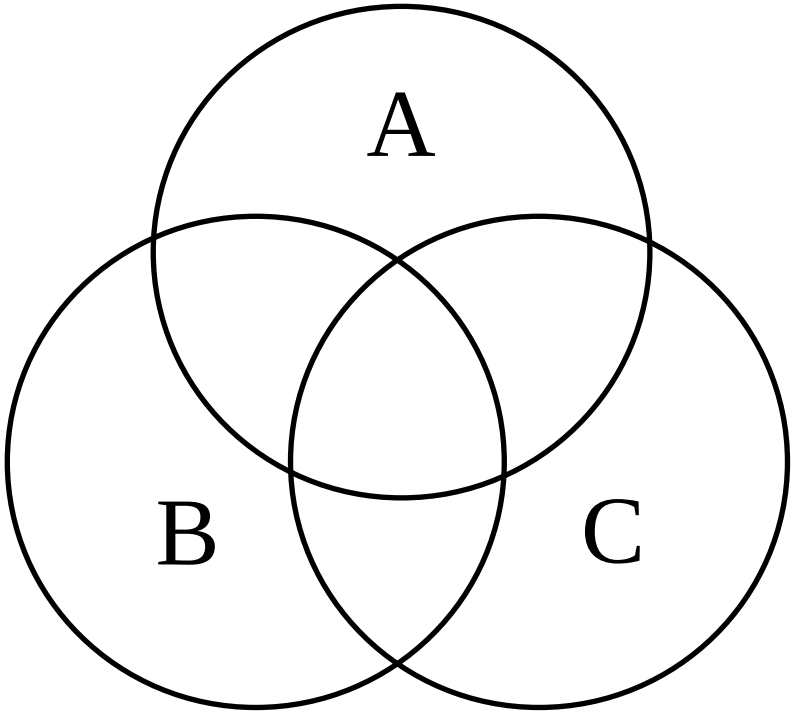

Consensus Theorem: Boolean Algebra

- $AB+AC+B'C$

  $=AB+B'C$

- $(A+B)(A+C)(B'+C)$

  $=(A+B)(B'+C)$

$AB+AC+B'C$

$=AB+AC1+B'C$

$=AB+AC(B+B')+B'C$

$=AB+ABC+AB'C+B'C$

$=AB(1+C)+(A+1)B'C$

$=AB+B'C$

Consensus Theorem: Logic Simulation

f(A,B,C)= AB+AC+B'C

g(A,B,C)=AB+B'C

Index	A	B	C	AB	AC	B'C	f	g
0	0	0	0	0	0	0		
1	0	0	1	0	0	1		
2	0	1	0	0	0	0		
3	0	1	1	0	0	0		
4	1	0	0	0	0	0		
5	1	0	1	0	1	1		
6	1	1	0	1	0	0		
7	1	1	1	1	1	0		

Consensus Theorem (Examples)

Which one is not a consensus of the expressions on the right.

A. B

B. BC

C. (B+C)D

D. BCD

E. BCDE

1. A+A’B
2. A+A’BC
3. A(B+C)+A’D
4. ABC+A’D+BCDE

Shannon's Expansion

- Shannon's expansion assumes a switching algebra system
- Divide a switching function into smaller functions
- Pick a variable x, partition the switching function into two cases: x=1 and x=0
  - $f(x,y,z,\ldots)= xf(x=1,y,z,\ldots) + x'f(x=0,y,z,\ldots)$
- For example
  - $f(x)=xf(1)+x'f(0)$
  - $f(x,y)=xf(1,y)+x'f(0,y)$

Shannon's Expansion (Example)

$$f(a,b,c) = a'b' + bc + ab'c$$

Shannon's expansion:

$$f(a,b,c) = af(1,b,c) + a'f(0,b,c)$$

Shannon's Expansion: Example

$$f(x, y, z) = xf(x = 1, y, z) + x'f(x = 0, y, z)$$

$$f(x, y) = (x + f(x = ?, y))(x' + f(x = ?', y))$$

- A. ?=0
- B. ?=1.

Shannon's Expansion

- Decompose the switching function into minterms

$$f(x,y) = xf(1,y) + x'f(0,y)$$
$$= x\big(yf(1,1) + y'f(1,0)\big) + x'(y\big(f(0,1) + y'f(0,0)\big)$$
$$= xyf(1,1) + xy'f(1,0) + x'yf(0,1) + x'y'f(0,0).$$

id	x	y	f(x,y)
0	0	0	f(0,0)
1	0	1	f(0,1)
2	1	0	f(1,0)
3	1	1	f(1,1)

Shannon's expansion can decompose a switching function into a truth table.

Shannon's Expansion vs Truth Table

Example: f(x,y)= x+ x'y

$$f(x,y) = xf(1,y) + x'f(0,y)$$
$$= x\big(yf(1,1) + y'f(1,0)\big) + x'(y\big(f(0,1) + y'f(0,0)\big)$$
$$= xyf(1,1) + xy'f(1,0) + x'yf(0,1) + x'y'f(0,0).$$

id	x	y	f(x,y)
0	0	0	f(0,0)
1	0	1	f(0,1)
2	1	0	f(1,0)
3	1	1	f(1,1)

Shannon's expansion can decompose a switching function into a truth table.

Shannon's Expansion

- Decompose the switching function into minterms

$$f(x,y) = xf(1,y) + x'f(0,y)$$
$$= x\big(yf(1,1) + y'f(1,0)\big) + x'(y\big(f(0,1) + y'f(0,0)\big)$$
$$= xyf(1,1) + xy'f(1,0) + x'yf(0,1) + x'y'f(0,0).$$

- Decompose the switching function into maxterms

$$f(x,y) = (x' + f(1,y)) \cdot (x + f(0,y))$$
$$= (x' + (y' + f(1,1)) \cdot (y + f(1,0))) \cdot (x + \big(y' + f(0,1)\big) \cdot (y + f(0,0)))$$
$$= \big(x' + y' + f(1,1)\big)\big(x' + y + f(1,0)\big)\big(x + y' + f(0,1)\big)\big(x + y + f(0,0)\big)$$

Shannon's Expansion: Example

Which variable in ab'+ac+bc can be used for expansion?

A. a

B. b

C. c

D. None of the above

Shannon's Expansion: Example

F(A,B,C)=AB'+AC+BC

Remark: The choice of the variable for expansion is a nontrivial question.

Review Summary: Switching Algebra and Karnaugh Map

Shannon's expansion and consensus theorem are used for logic optimization

- Shannon's expansion **divides** the problem into smaller functions
- Consensus theorem finds common terms when we **merge** small functions
- Karnaugh map mimics the above two operations in two dimensional space as a visual aid.

Part I. Combinational Logic

II) Specification

1. Language
2. Boolean Algebra

   Canonical Expression: Sum of minterms and Product of maxterms

3. Truth Table: minterms and maxterms
4. Incompletely Specified Function

II. Specification (use addition as an example)

Decimal Addition

$$\begin{array}{rr} & 5 \\ + & 7 \\ \hline 1 & 2 \end{array}$$

Carry Sum

Binary Addition

$$\begin{array}{rrrrl} 1 & 1 & 1 & & \text{Carry bits} \\ & 1 & 0 & 1 & 5 \\ + & 1 & 1 & 1 & 7 \\ \hline & & & & 12 \\ 1 & 1 & 0 & 0 & \end{array}$$

Carryout Sums

II. Specification (use addition as an example)

Decimal Addition

Binary Addition

II. Specification (use addition as an example)

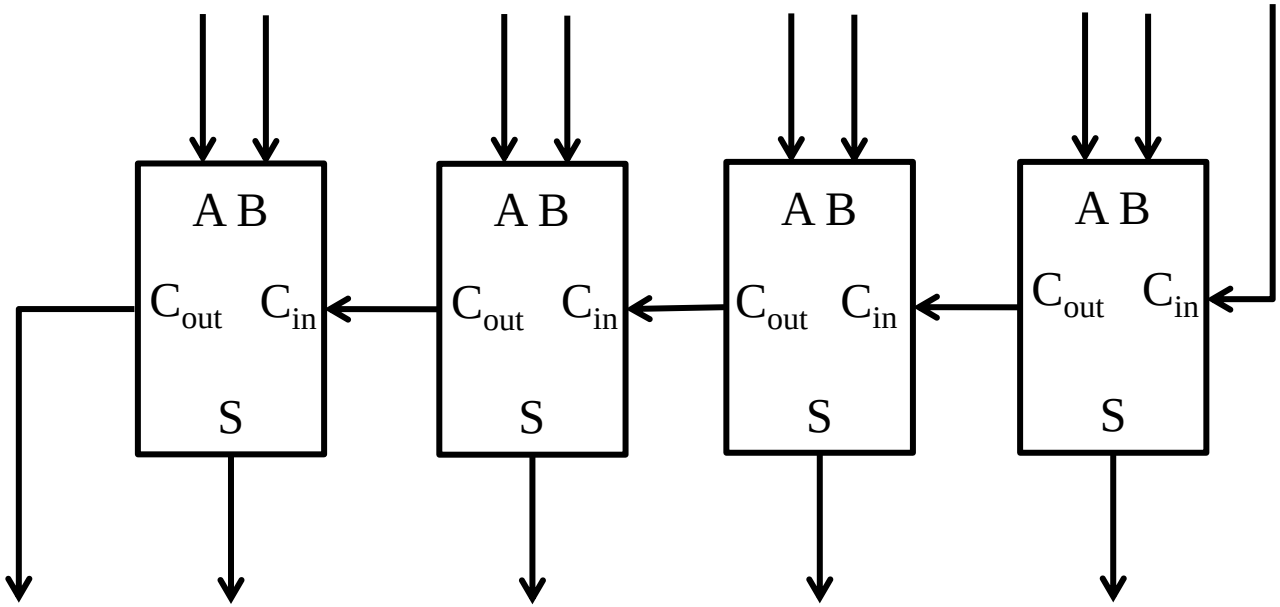

Binary Addition: Hardware

- Half Adder: Two inputs (a,b) and two outputs (carry, sum).

- Full Adder: Three inputs (a,b,c_{in}) and two outputs (carry, sum).

Half Adder

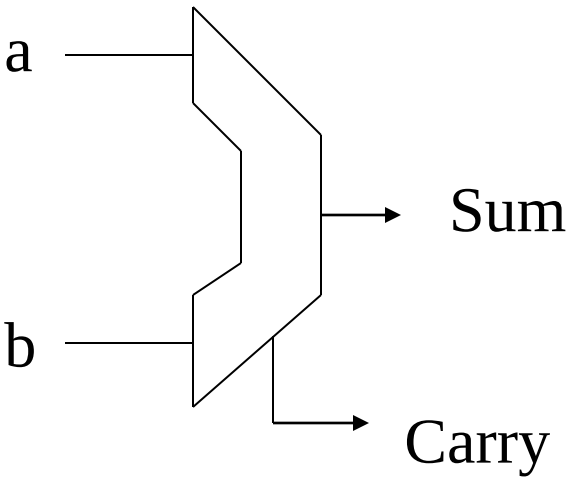

Truth Table

id	a	b	carry	sum
0	0	0	0	0
1	0	1	0	1
2	1	0	0	1
3	1	1	1	0

Switching Function

Switching Expressions:

$$\text{Sum}(a,b) = a' \cdot b + a \cdot b'$$

$$\text{Carry}(a, b) = a \cdot b$$

Ex:

$$\text{Sum}(0,0) = 0' \cdot 0 + 0 \cdot 0' = 0 + 0 = 0$$

$$\text{Sum}(0,1) = 0' \cdot 1 + 0 \cdot 1' = 1 + 0 = 1$$

$$\text{Sum}(1,1) = 1' \cdot 1 + 1 \cdot 1' = 0 + 0 = 0$$

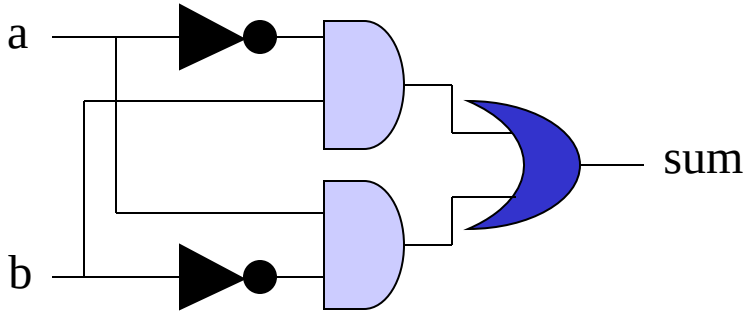

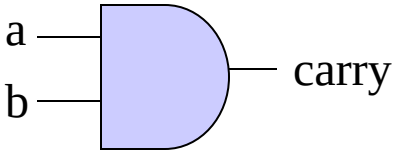

BSV notes

```
function Bit#(2) ha(Bit#(1) a, Bit#(1) b);
 Bit#(1) s = (~a & b) | (a & ~b);
 Bit#(1) c = a & b;
   return {c,s};
endfunction
```

- {c, s} represents bit concatenation

Full Adder

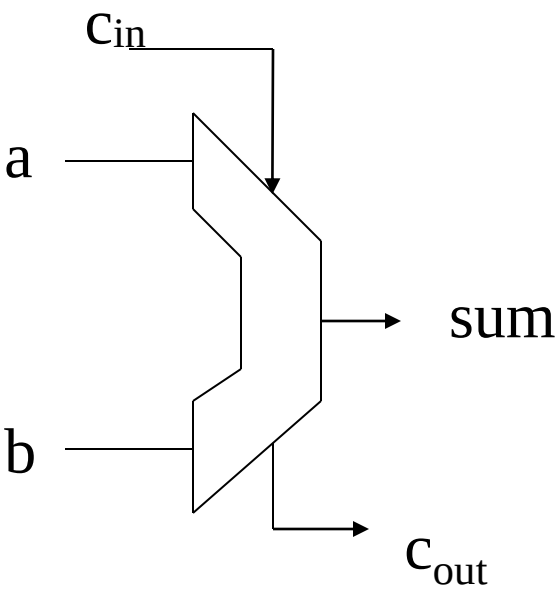

id	a	b	c_{in}	c_{out}	sum
0	0	0	0	0	0
1	0	0	1	0	1
2	0	1	0	0	1
3	0	1	1	1	0
4	1	0	0	0	1
5	1	0	1	1	0
6	1	1	0	1	0
7	1	1	1	1	1

Arithmetic:

$2c_{out}+sum=a+b+c_{in}$

Minterms

A product of all variables in the function.

A minterm is equal to 1 on exactly one row of the truth table.

id	a	b	c	carry	sum
0	0	0	0	0	0
1	0	0	1	0	a’b’c
2	0	1	0	0	a’bc’
3	0	1	1	a’bc	0
4	1	0	0	0	ab’c’
5	1	0	1	ab’c	0
6	1	1	0	abc’	0
7	1	1	1	abc	abc

Maxterms

A sum of all variables in the function.

A maxterm is equal to 0 on exactly one row of the truth table.

id	a	b	c	carry	sum
0	0	0	0	a+b+c	a+b+c
1	0	0	1	a+b+c’	1
2	0	1	0	a+b’+c	1
3	0	1	1	1	a+b’+c’
4	1	0	0	a’+b+c	1
5	1	0	1	1	a’+b+c’
6	1	1	0	1	a’+b’+c
7	1	1	1	1	1

Minterms and Maxterms

id	a	b	c	minterm	maxterm
0	0	0	0	m_0=a'b'c'	M_0=a+b+c
1	0	0	1	m_1=a'b'c	M_1=a+b+c'
2	0	1	0	m_2=a'bc'	M_2=a+b'+c
3	0	1	1	m_3=a'bc	M_3=a+b'+c'
4	1	0	0	m_4=ab'c'	M_4=a'+b+c
5	1	0	1	m_5=ab'c	M_5=a'+b+c'
6	1	1	0	m_6=abc'	M_6=a'+b'+c
7	1	1	1	m_7=abc	M_7=a'+b'+c'

Minterms cover all the outputs which are true (1).
Maxterms cover all the outputs which are false (0).

Minterms

$f_1(a,b,c) = a'bc + ab'c + abc' + abc$

$a'bc = 1$ iff $(a,b,c,) = (0,1,1)$
$ab'c = 1$ iff $(a,b,c,) = (1,0,1)$
$abc' = 1$ iff $(a,b,c,) = (1,1,0)$
$abc = 1$ iff $(a,b,c,) = (1,1,1)$
$f_1(a,b,c) = 1$ iff $(a,b,c) = (0,1,1), (1,0,1), (1,1,0)$, or $(1,1,1)$

Ex: $f_1(1,0,1) = 1'01 + 10'1 + 101' + 101 = 1$
$f_1(1,0,0) = 1'00 + 10'0 + 100' + 100 = 0$

Maxterms

$f_2(a,b,c) = (a+b+c)(a+b+c')(a+b'+c)(a'+b+c)$

$a + b + c = 0$ iff $(a,b,c,) = (0,0,0)$
$a + b + c' = 0$ iff $(a,b,c,) = (0,0,1)$
$a + b' + c = 0$ iff $(a,b,c,) = (0,1,0)$
$a' + b + c = 0$ iff $(a,b,c,) = (1,0,0)$
$f_2(a,b,c) = 0$ iff $(a,b,c) = (0,0,0), (0,0,1), (0,1,0), (1,0,0)$

Ex: $f_2(1,0,1) = (1+0+1)(1+0+1')(1+0'+1)(1'+0+1) = 1$
$f_2(0,1,0) = (0+1+0)(0+1+0')(0+1'+0)(0'+1+0) = 0$

$f_1(a,b,c) = a'bc + ab'c + abc' + abc$

$f_2(a,b,c) = (a+b+c)(a+b+c')(a+b'+c)(a'+b+c)$

$f_1(a, b, c) = m_3 + m_5 + m_6 + m_7 = \Sigma m(3,5,6,7)$

$f_2(a, b, c) = M_0M_1M_2M_4 = \Pi M(0, 1, 2, 4)$

Does $f_1 = f_2$?

A. Yes

B. No.

The coverage of a single minterm. e.g. m_4 = ab'c'

Id	a	b	c_{in}	carry	minterm $_4$ = ab'c'
0	0	0	0	0	0
1	0	0	1	0	0
2	0	1	0	0	0
3	0	1	1	1	0
4	1	0	0	0	1
5	1	0	1	1	0
6	1	1	0	1	0
7	1	1	1	1	0

Only one row has a 1.

The coverage of a single maxterm. E.g. M_4 = a'+b+c

Id	a	b	c_{in}	carry	maxterm 4 = a+b+c
0	0	0	0	0	1
1	0	0	1	0	1
2	0	1	0	0	1
3	0	1	1	1	1
4	1	0	0	0	0
5	1	0	1	1	1
6	1	1	0	1	1
7	1	1	1	1	1

Only one row has a 0.

Minterms and Maxterms: Summary

$f_1(a,b,c) = a'bc + ab'c + abc' + abc$
$f_2(a,b,c) = (a+b+c)(a+b+c')(a+b'+c)(a'+b+c)$

Canonical presentation of logic functions
Conversion between truth tables and switching functions

Incompletely Specified Function

Don't care set is important because it allows us to minimize the function

Id	a	b	f (a, b)
0	0	0	1
1	0	1	0
2	1	0	1
3	1	1	-

1) The input does not happen.
2) The input happens, but the output is ignored.

Examples:
-Decimal number 0… 9 uses 4 bits. (1,1,1,1) does not happen.
-Final carry out bit (output is ignored).

Incompletely Specified Function

id	a	b	c	g
0	0	0	0	0
1	0	0	1	1
2	0	1	0	-
3	0	1	1	1
4	1	0	0	1
5	1	0	1	-
6	1	1	0	0
7	1	1	1	1

$g_1(a,b,c)=a'b'c+a'bc+ab'c'+abc$
$=m_1+m_3+m_4+m_7$
$=\sum m(1,3,4,7)$

$g_2(a,b,c)=(a+b+c)(a'+b'+c)$
$=M_0M_6$
$=\prod M(0,6)$

Incompletely Specified Function

id	a	b	c	g
0	0	0	0	0
1	0	0	1	1
2	0	1	0	-
3	0	1	1	1
4	1	0	0	1
5	1	0	1	-
6	1	1	0	0
7	1	1	1	1

$g_1(a,b,c)=\sum m(1,3,4,7)$
$g_2(a,b,c)=\prod M(0,6)$

Does $g_1(a,b,c) = g_2(a,b,c)$?
A: Yes
B: No