CSE 140 Lecture 16
System Designs

CK Cheng

CSE Dept.

UC San Diego

System Designs

- Introduction
  - Methodology and Framework
- Components
- Specification
- Implementation

Introduction

- Methodology
  - Approach with success stories.
  - Hierarchical designs with interface between the modules (BSV).
- Data Subsystem and Control Subsystem
  - For n-bit data, each operation takes n times or more in hardware complexity.
  - Data subsystem carries out the data operations and transports.
  - Control system sequences the data subsystem and itself.

I. Introduction: Framework

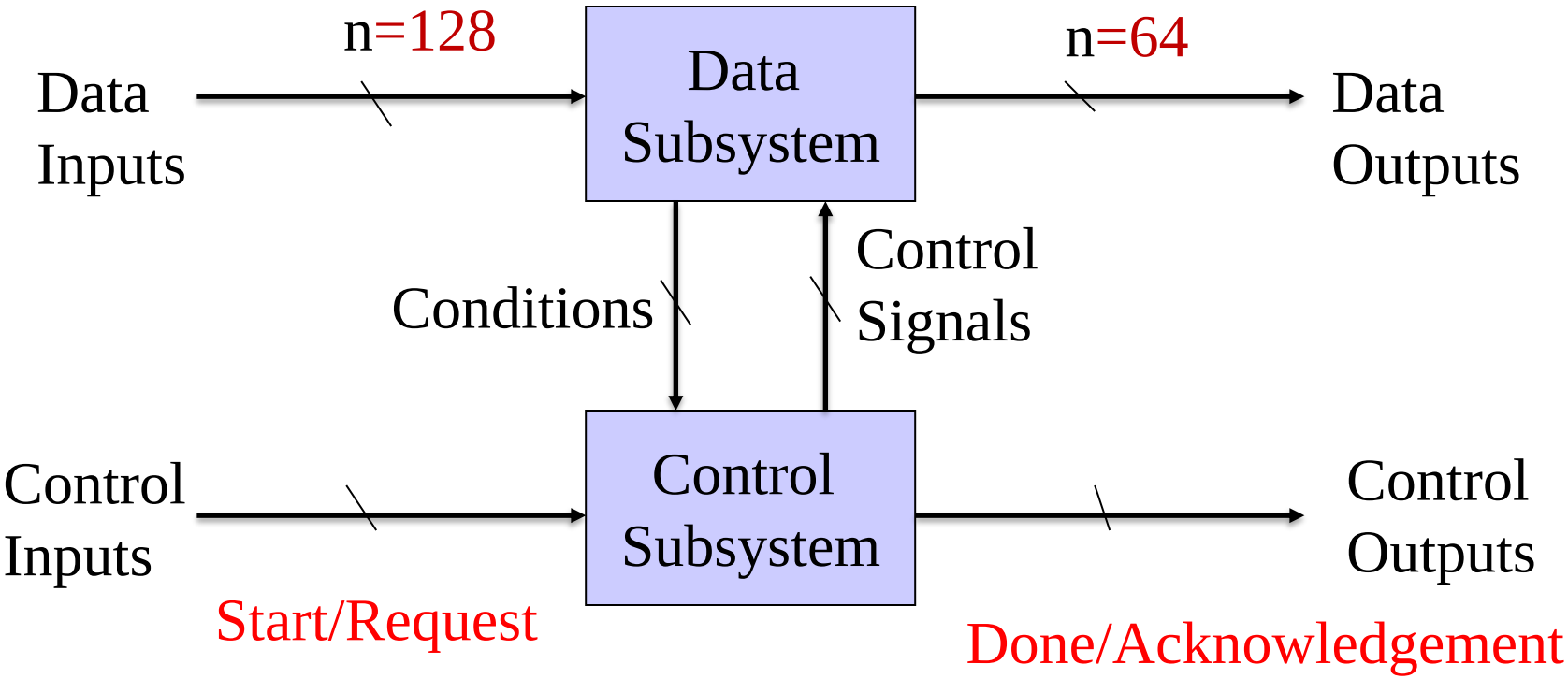

I. Introduction: Handshaking

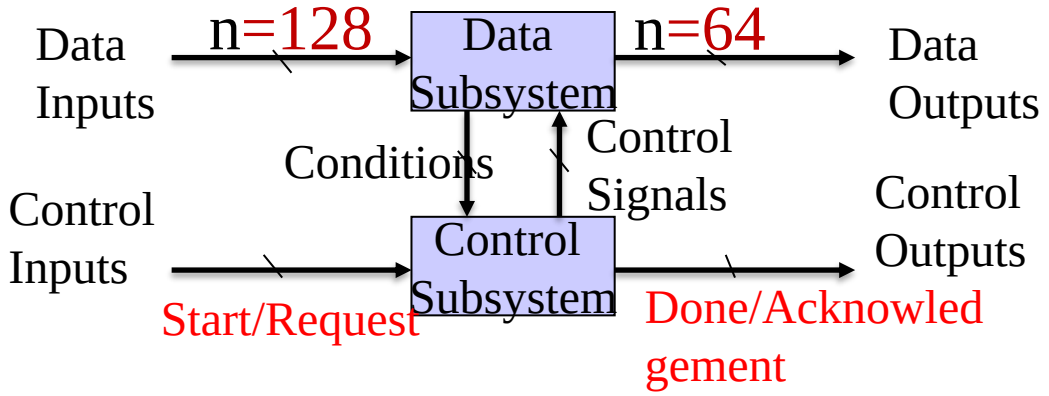

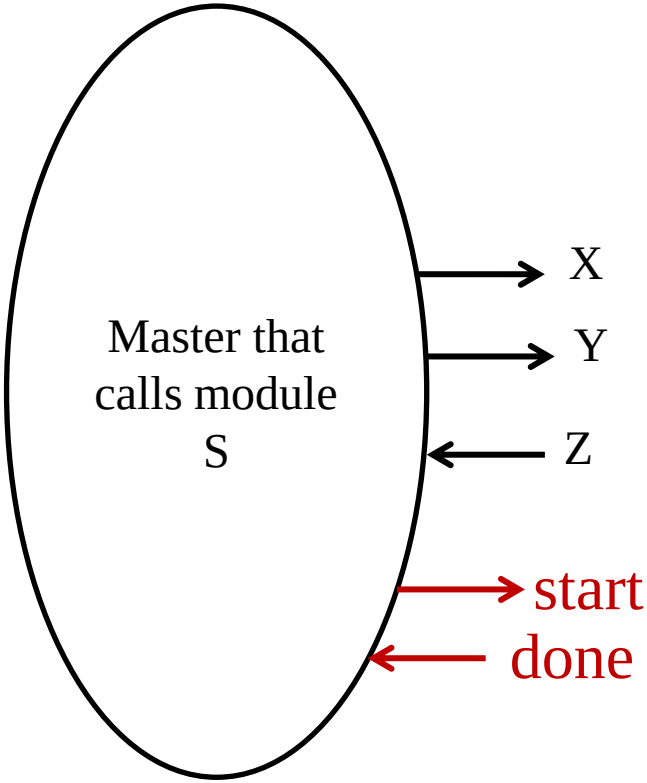

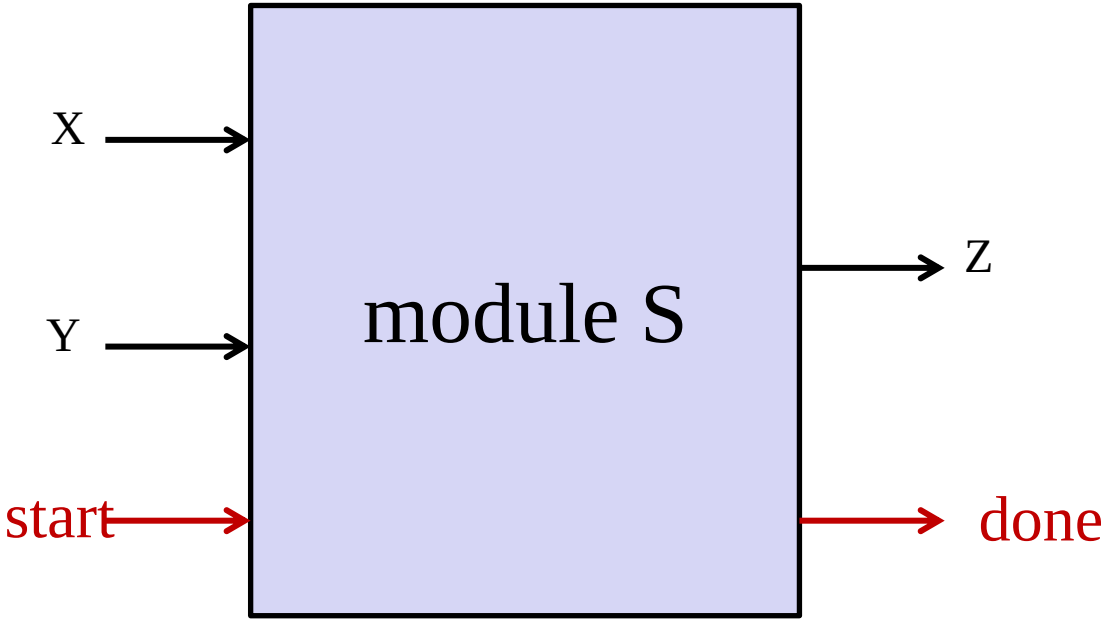

Handshaking

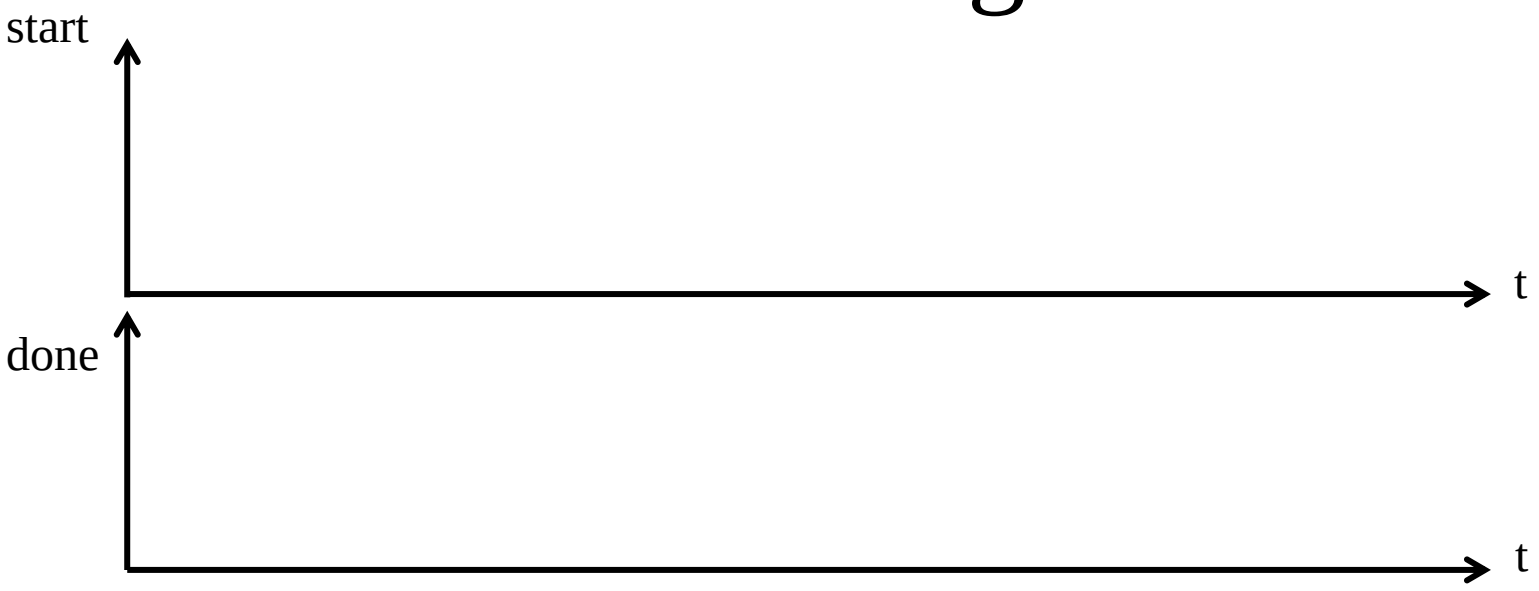

Handshaking

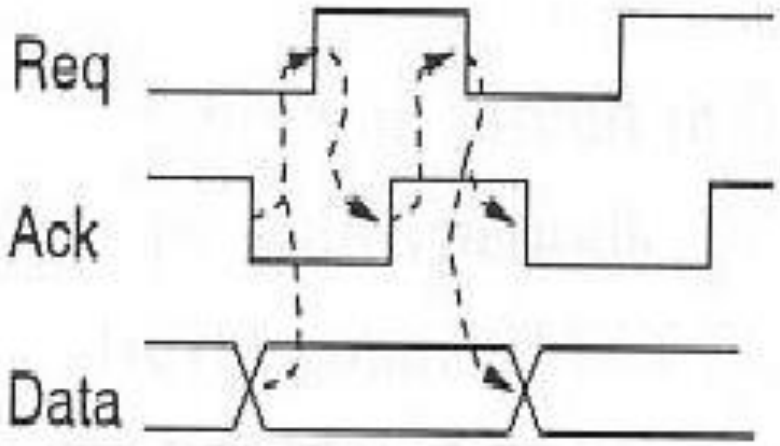

Handshaking: Example

The master module that calls module S controls the following signals

A. Signal start
B. Signal done
C. Signals start and done
D. None of the above

II. Components

	Components	**Functions**
Data Subsystem	Storage Modules	Data storage
	Operators	Data operations
	Interconnections	Data transport
Control Subsystem	Sequential machines	Control of data operations
		Control of data transports
		Control of the sequential system

II. Data Subsystem Components

- Storage: Register, RAM, FIFO, LIFO, Counter, Shifter
- Operator: ALU, Floating Point Operators
- Interconnect: Wire, Buses, Crossbars

II. Components: Storage Modules, Register

LD: Load
CLR: Clear

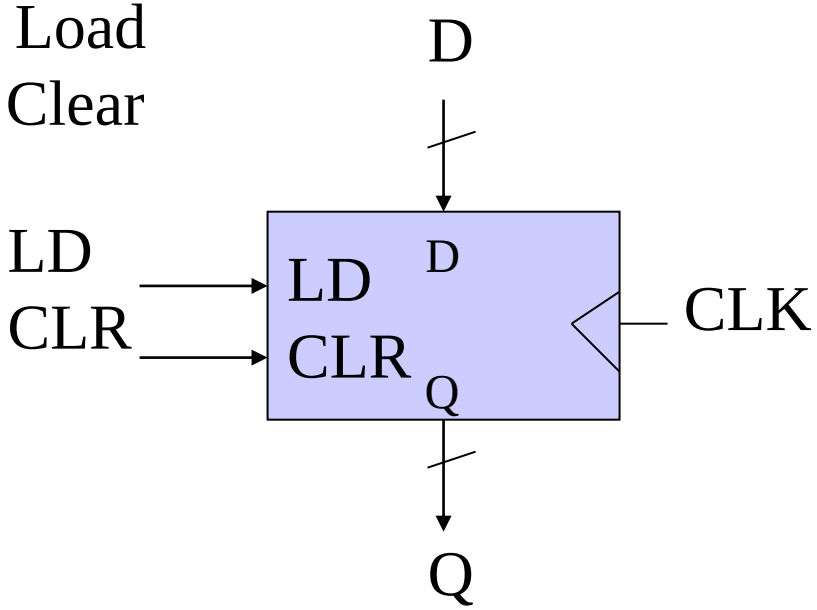

$$
\begin{aligned}
Q(t+1) &= (0, 0, .., 0) && \text{if CLR = 1} \\
&= D && \text{if LD = 1 and CLR = 0} \\
&= Q(t) && \text{if LD = 0 and CLR = 0}
\end{aligned}
$$

Modulo-n Counter

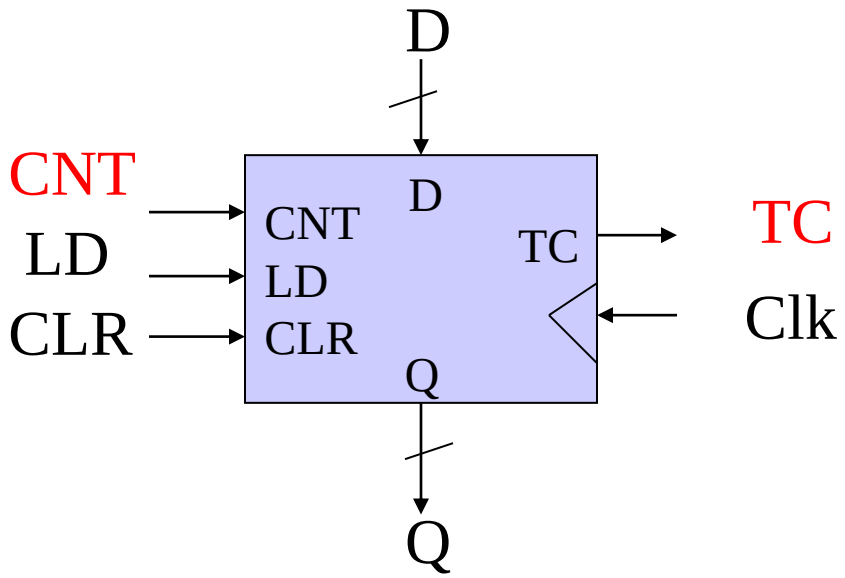

Q (t+1)	= (0, 0, .. , 0)	if CLR = 1
	= D	if LD = 1 and CLR = 0
	= (Q(t)+1)mod n	if LD = 0, CNT = 1 and CLR = 0
	= Q (t)	if LD = 0, CNT = 0 and CLR = 0

TC	= 1	if Q (t) = n-1 and CNT = 1
	= 0	otherwise

Storage Component: Registers, Array of Registers

Registers: If C then R ← D

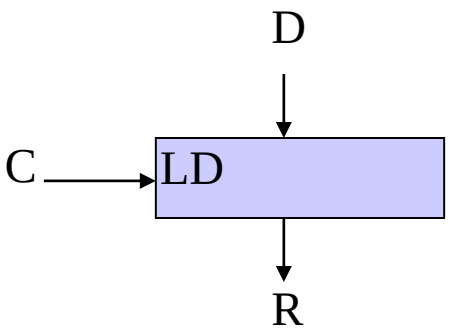

Register Array: If C then $R_{address}$ ← D
Sharing connections and controls

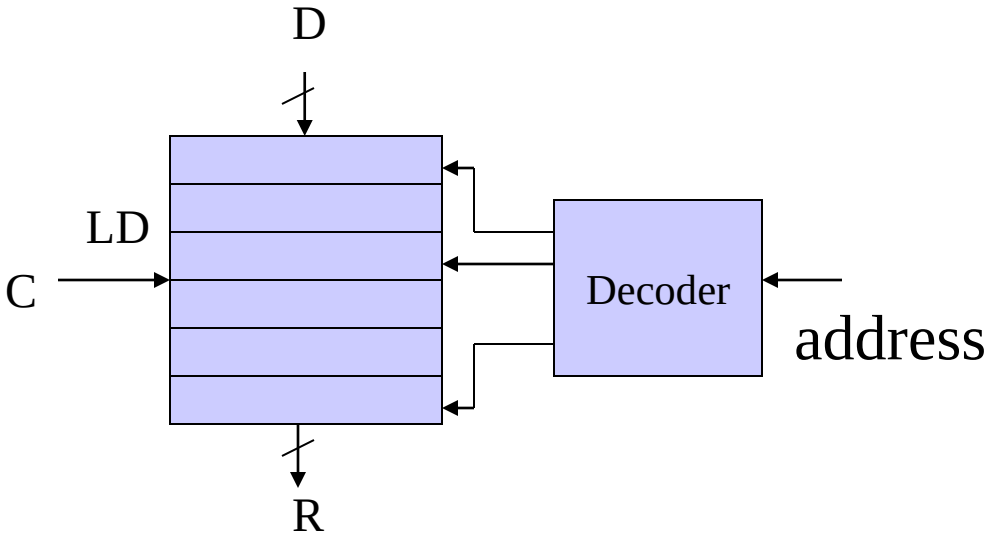

Storage Components: RAM, FIFO, LIFO

RAM

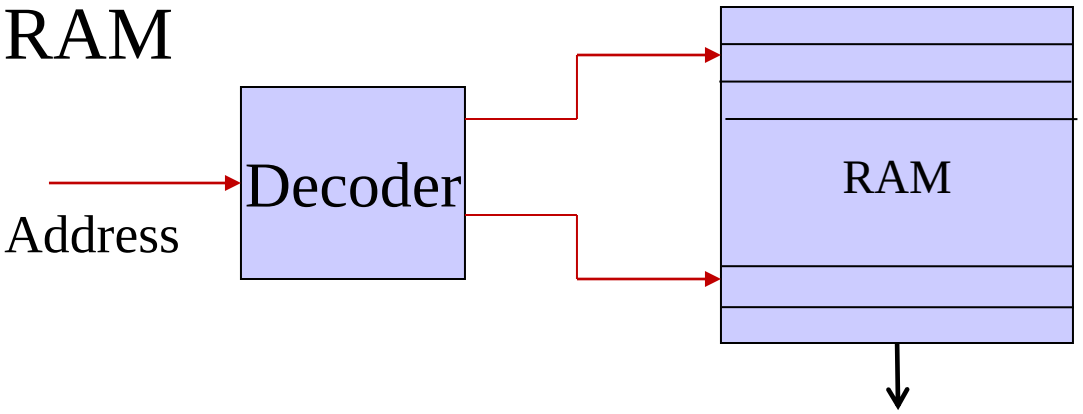

Size of RAM larger than registers
Performance is slower

FIFO (First in first out)

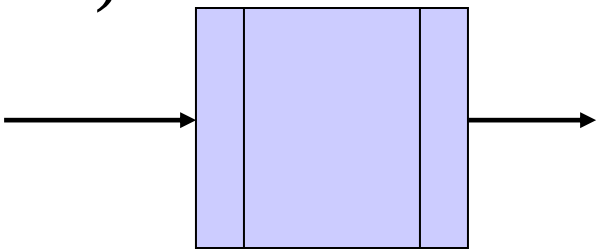

LIFO (Last in first out: Stack)

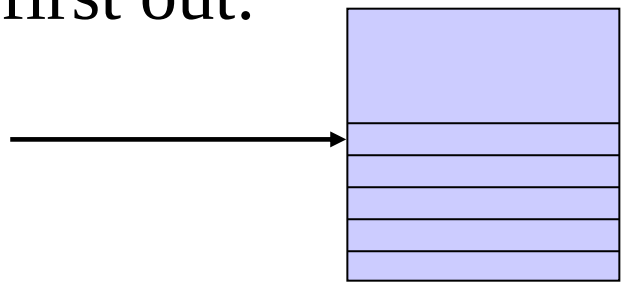

Functional Modules

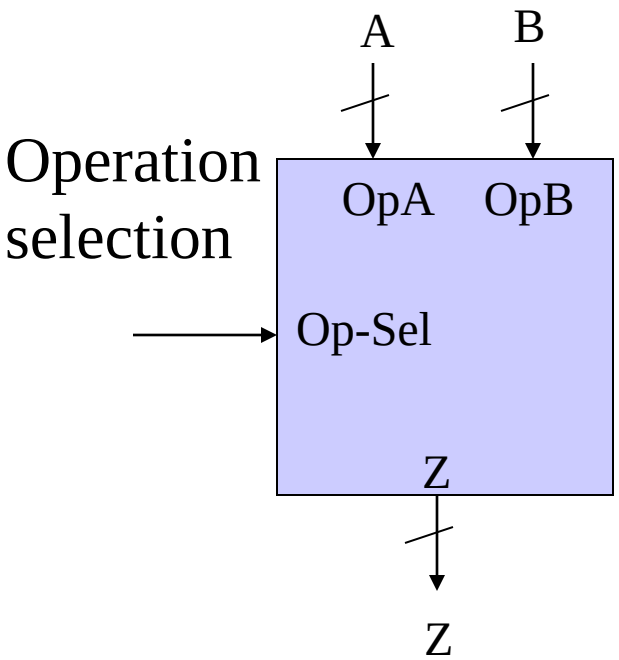


```
CASE Op-Sel Is
 When F1, Z <= A op1 B
 When F2, Z <= A op2 B
    .
    .
End CASE
```

Example:

CASE Op-Set Is

Z <= (A + B)mod 2^n if Op-Sel=addition,

Z <= (A - B)mod 2^n if Op-Sel=subtraction

End CASE

Interconnect Modules (Wires and Switches)

- Single Lines
- Band of Wires
- Shared Buses
- Crossbar

1. Single line (shifting, time sharing)

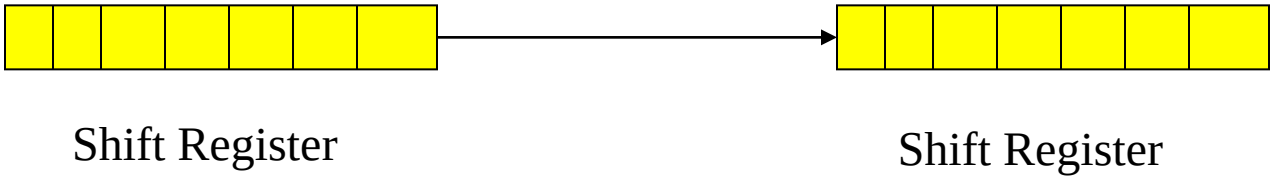

2. Band of Wires (BUS)

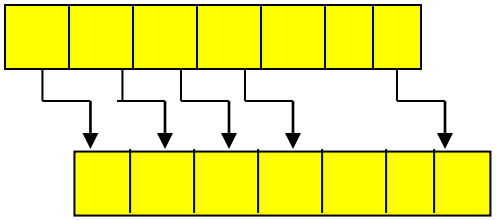

3. Shared Bus

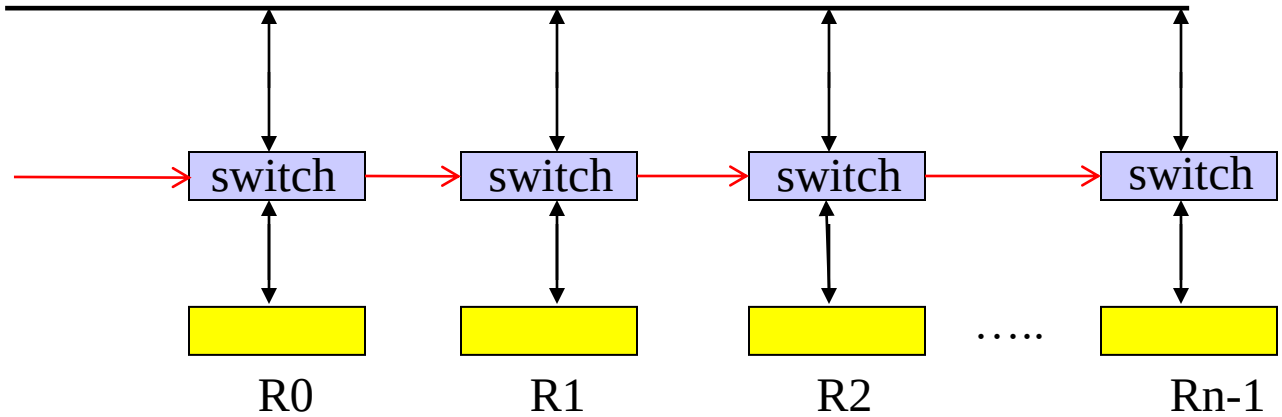

Switches

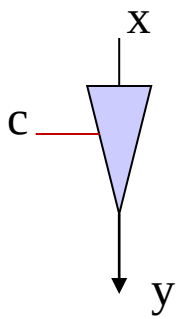

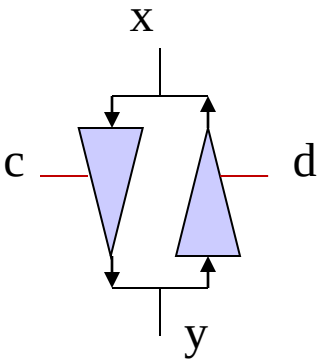

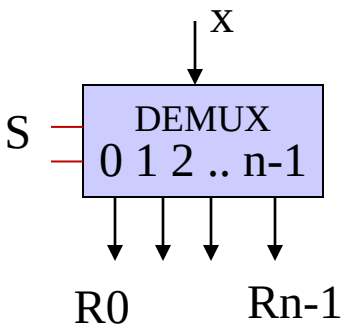

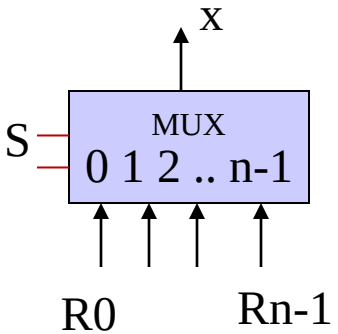

4. Crossbar (Multiple buses running horizontally)

m simultaneous transfers are possible, but more expensive.

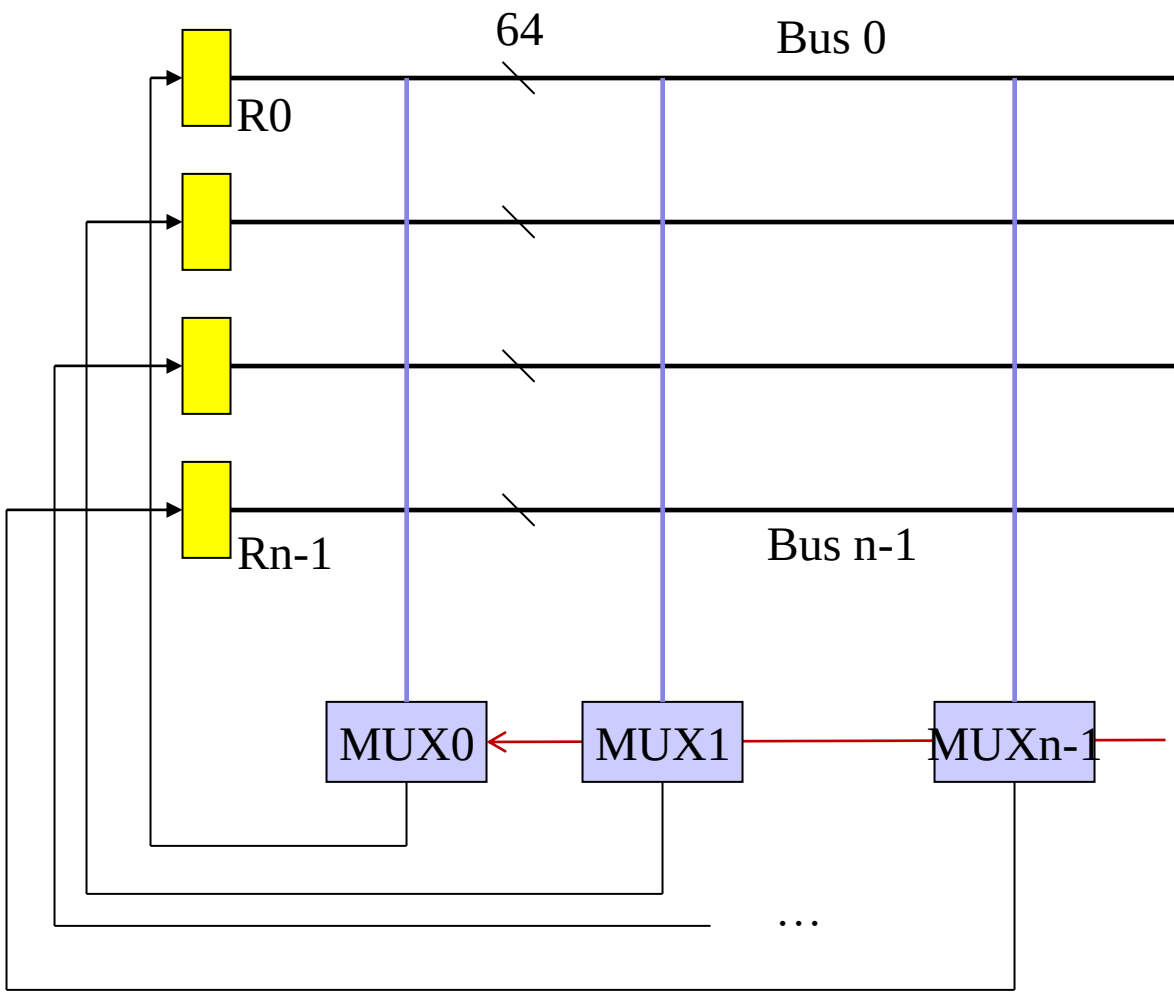

Crossbar Switches: VLSI Design

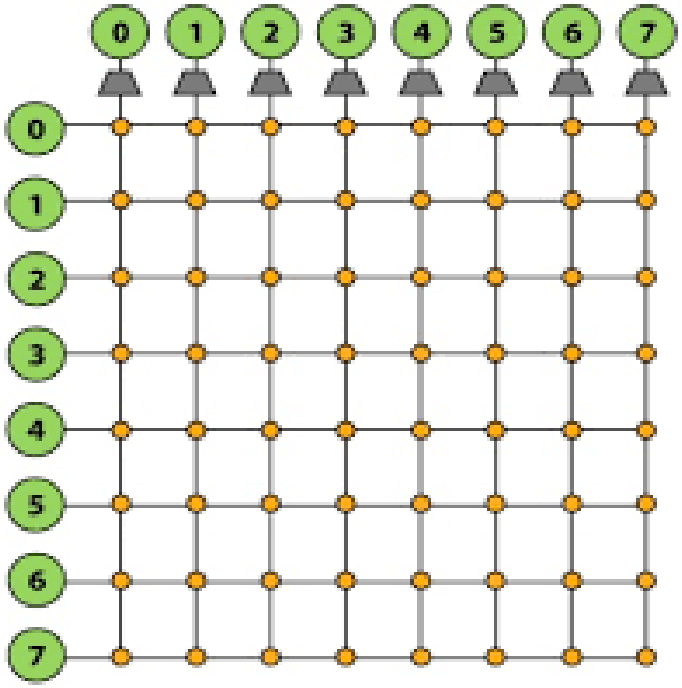

Multistage Network: Clos Network

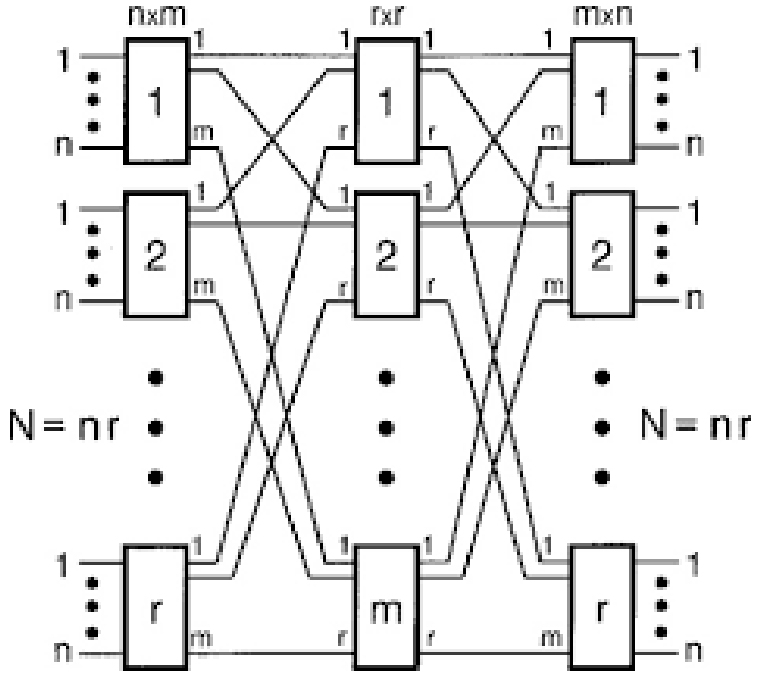

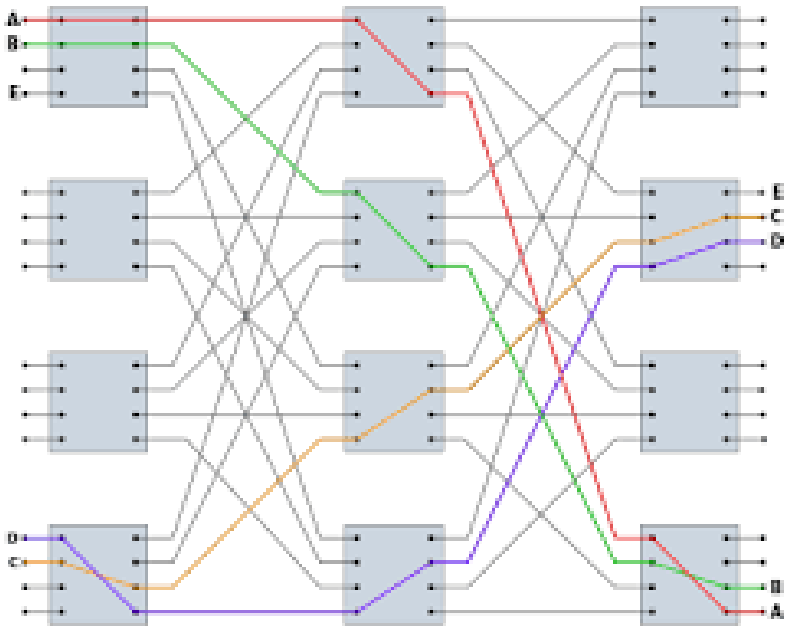

Multistage Networks: Benes and Omega Networks

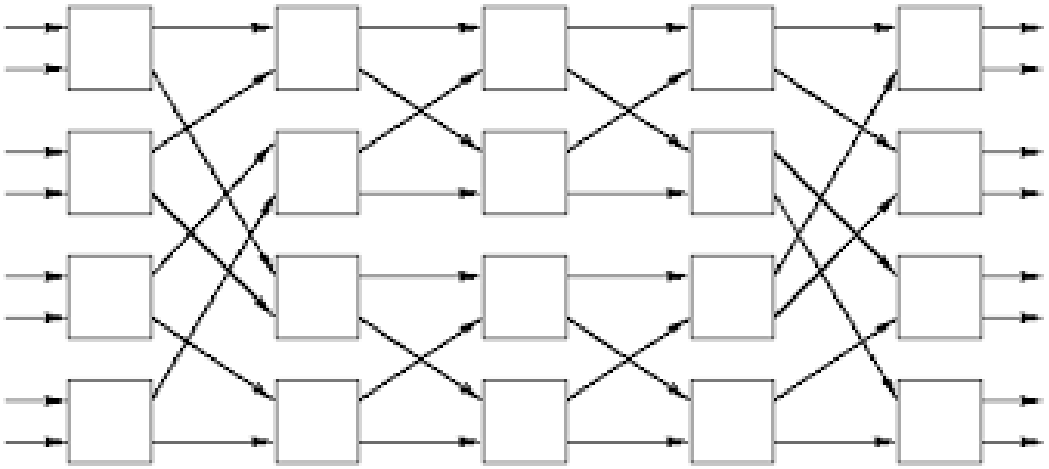

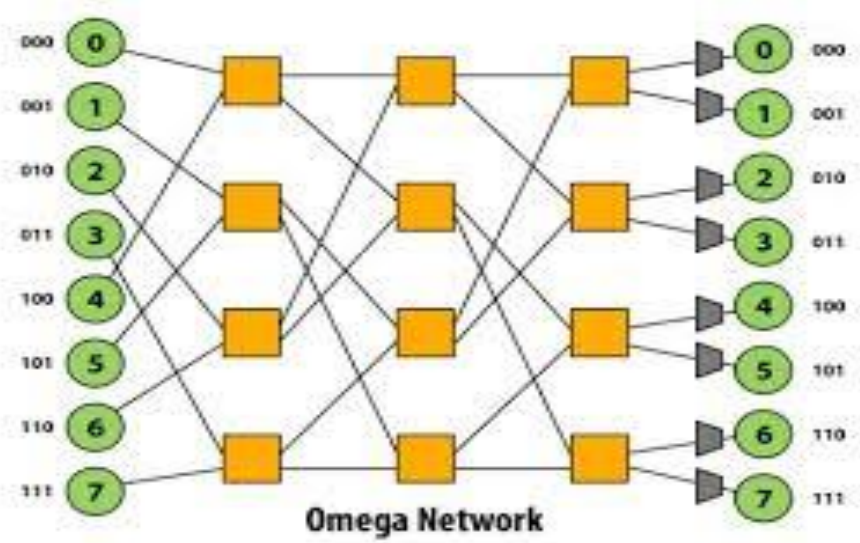

Blocking: Previous assignment can block the next route.

III. Specification: Program

1. Objects (Registers, Outputs of combinational logic)
2. Operation (Logic, Add, Multiplication, DSP, and etc.)
3. Assignment
4. Sequencing

Example:

Signal S1, S2, R[15:0]: FFs, Registers, wires
Z ← A + B: Registers, Adder, Interconnect
R1 ← R2: Registers and Interconnect
Begin, End: Control
if ( ) then ( ), ENDIF: Control

Ex. If C then R1← S1
Else R2 ← S2
Endif;

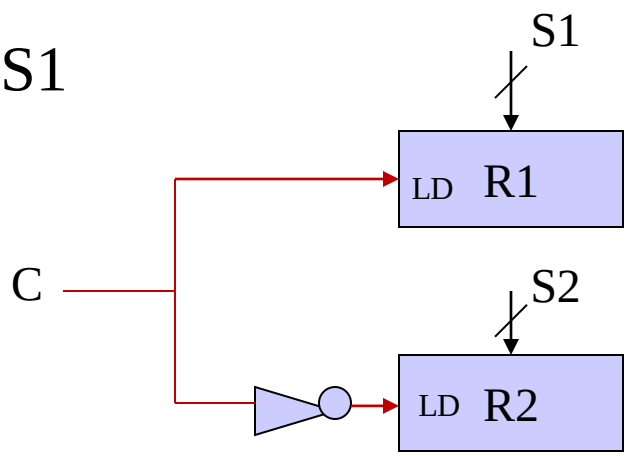

If C1 then X ← A
Else X ← B + C
Endif
If C2 then Rg ← X
Endif

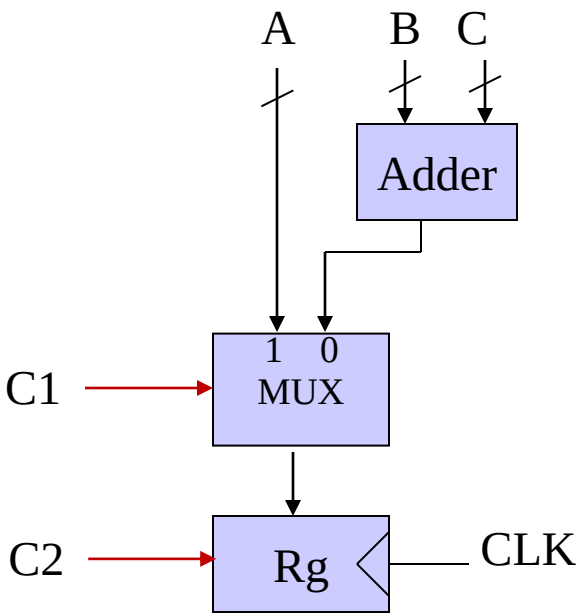

System Designs

- Introduction
  - Methodology and Framework
- Components
- Specification
- Implementation

VI. Implementation

- Example
- Handshaking
  - Request and Acknowledgement
- Datapath Subsystem
  - Data Operators
  - Data Transporters
- Control Subsystem
  - One Hot Machine Design

VI. Implementation: Example

AddModule(X, Y, Z, start, done)

{ Input X[15:0], Y[15:0] type bit-vector,

start type Boolean;

<u>Local-Object</u> A[15:0], B[15:0] type bit-vector;

<u>Output</u> Z[15:0] type bit-vector,

done type Boolean;

S0: If start' goto S0 || done ← 1;

S1: A ← X || B ← Y || done ← 0;

S2: Z ← Add(A, B) || goto S0;

}

Exercise: Go through the handshaking, data subsystem and control subsystem designs.

AddModule(X,Y,start,done)

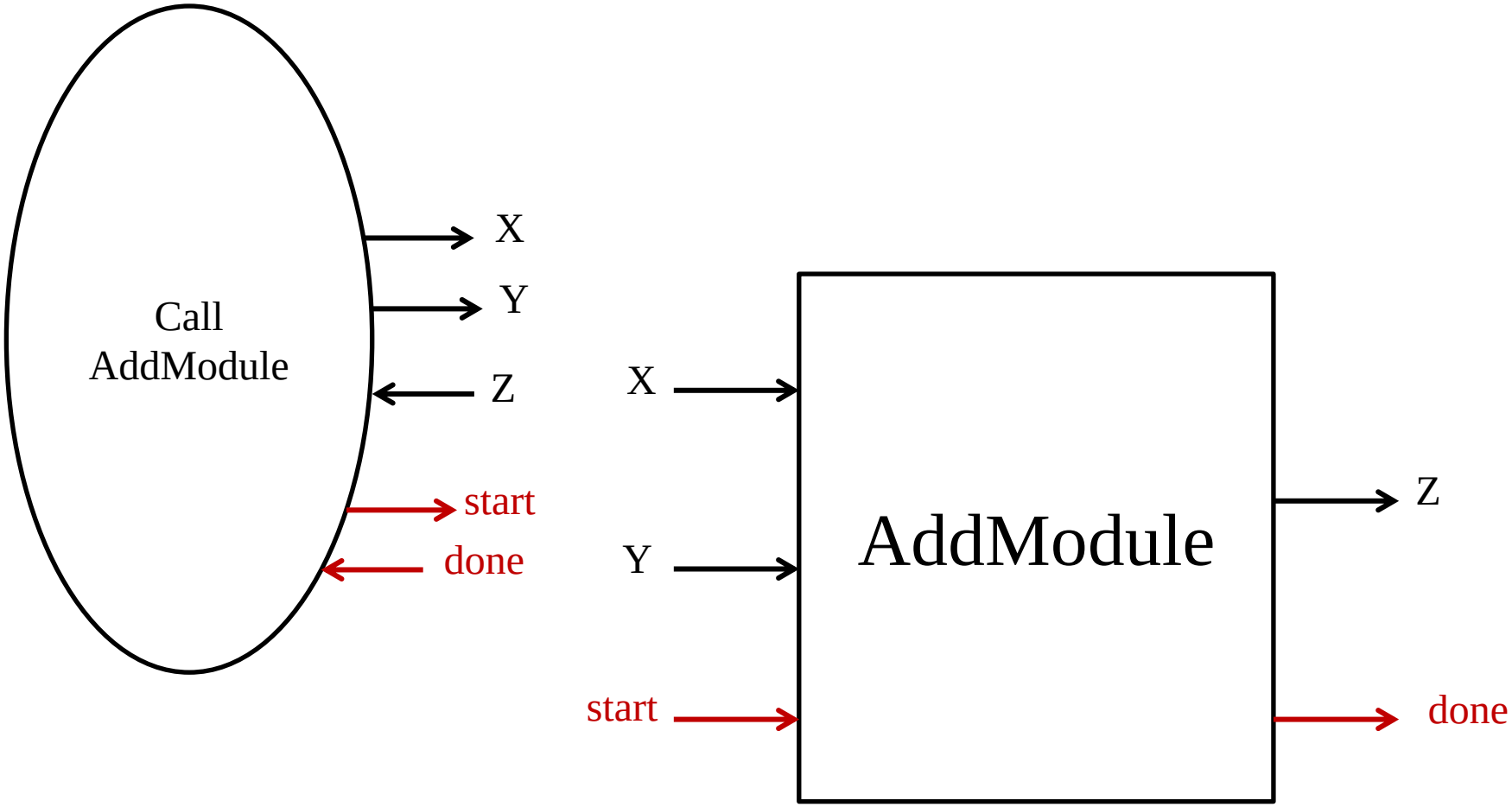

Example

Suppose that each step (Si) takes one clock cycle. How many clock cycles does the AddModule take to complete one handshaking iteration?

A. One cycle
B. Two cycles
C. More than two cycles