CSE 140 Lecture 12
Standard Combinational Modules

CK Cheng

CSE Dept.

UC San Diego

Part III. Standard Modules

Interconnect Modules:

1. Decoder, 2. Encoder

3. Multiplexer, 4. Demultiplexer

Multiplexer

- Definition
- Logic Diagram
- Application

Interconnect: Decoder, Encoder, Mux, DeMux

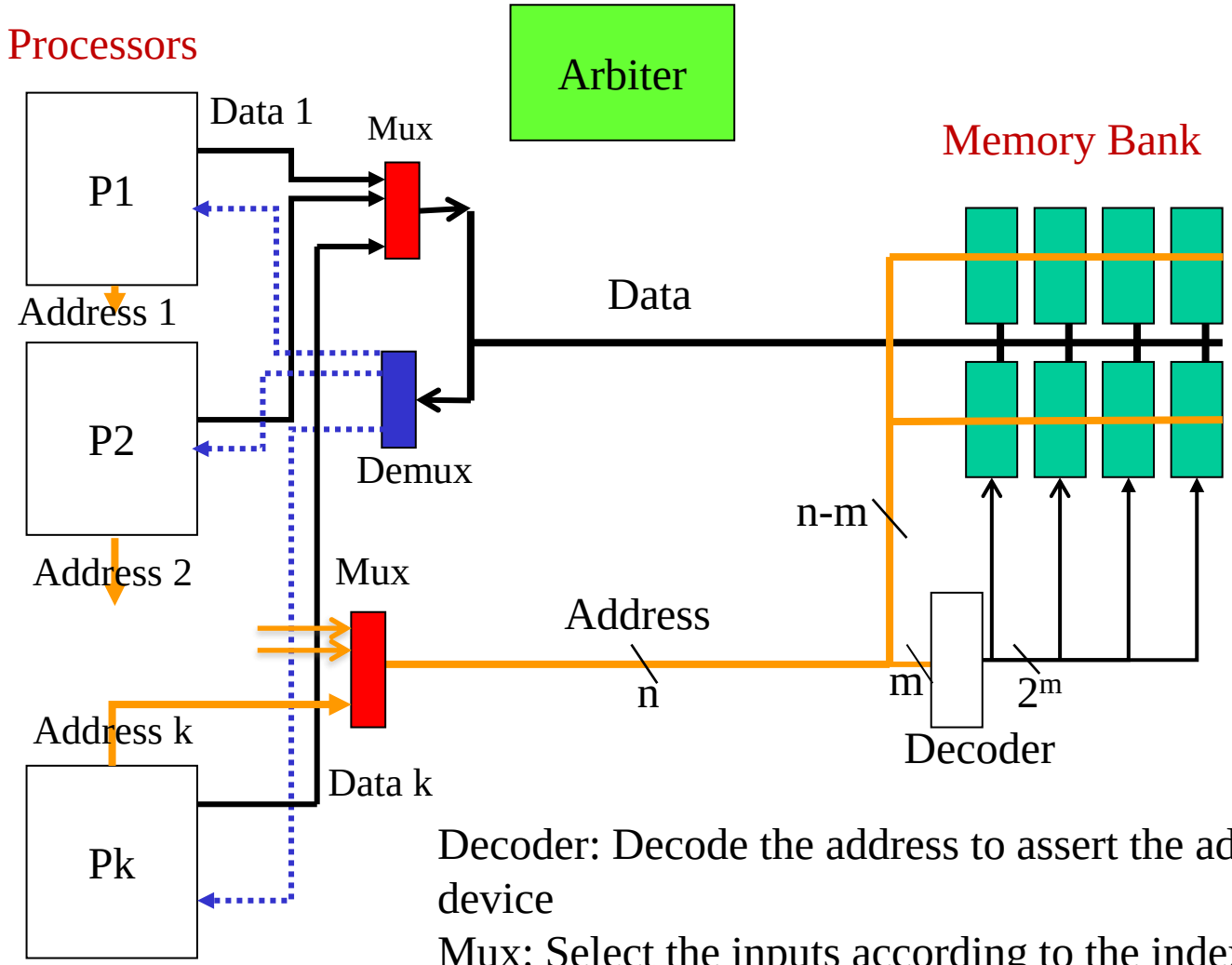

Decoder: Decode the address to assert the addressed device

Mux: Select the inputs according to the index addressed by the control signals

Multiplexer Definition

A. A device that interleaves two or more activities
B. A communications device that combines several signals for transmission over a single medium
C. A logic circuit that sends one of several inputs out over a single output channel.
D. The circuit that uses a common communications channel for sending two or more messages or signals.
E. All of the above

3. Mux (Multiplexer) Definition: A digital module that selects one of data inputs according to the binary address of the selector.

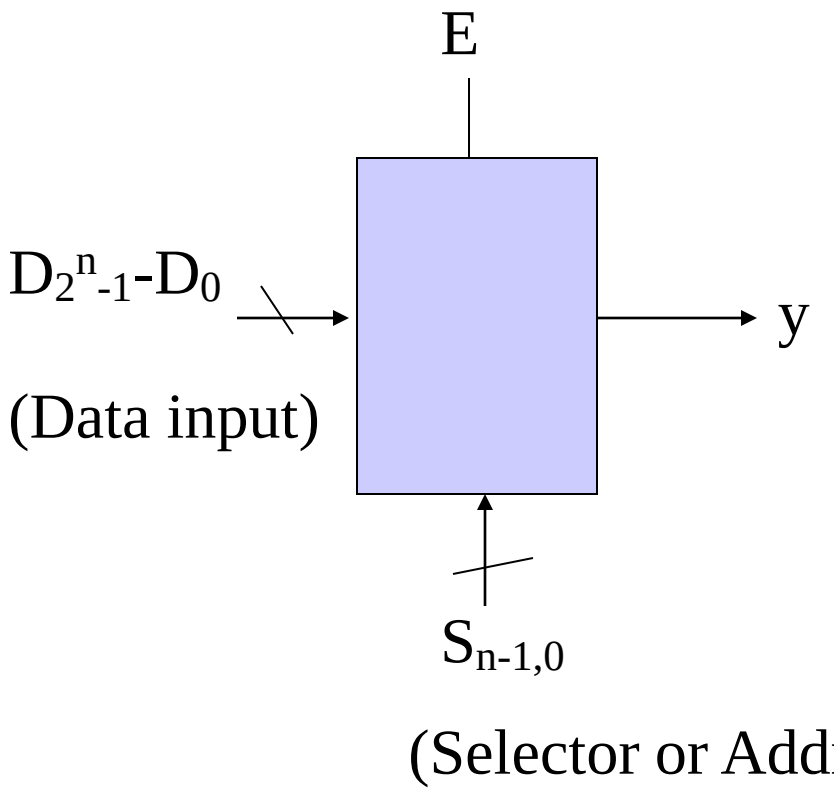

Description

If E = 1

  $y = D_i$ where $i = (S_{n-1}, .. , S_0)$

Else

  $y = 0$

Multiplexer (Mux): Definition

- Selects between one of *N* inputs to connect to the output.
- $\log_2 N$-bit select input – control input

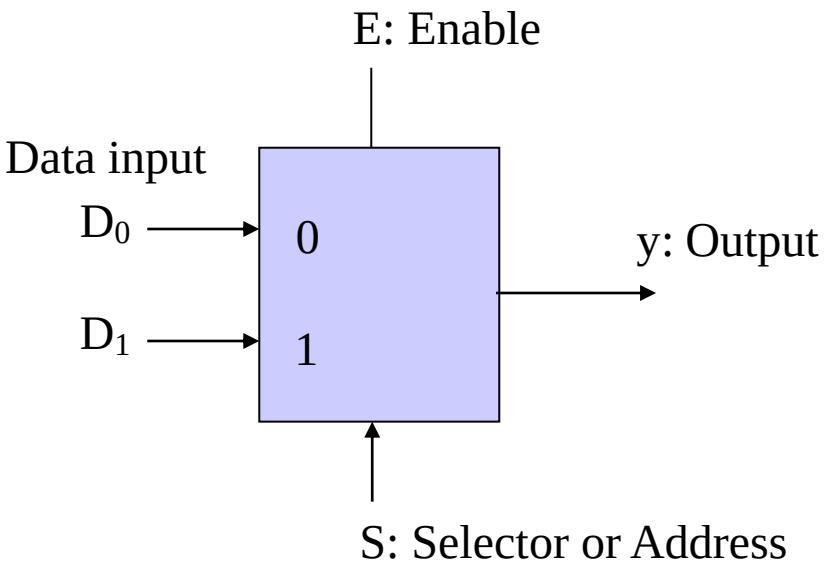

Multiplexer (Mux): Definition

- Selects between one of N inputs to connect to the output.
- $\log_2 N$-bit select input – control input
- Example: 2:1 Mux

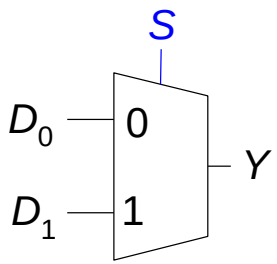

S	D_1	D_0	Y
0	0	0	0
0	0	1	1
0	1	0	0
0	1	1	1
1	0	0	0
1	0	1	0
1	1	0	1
1	1	1	1

S	Y
0	D_0
1	D_1

What is the output of the following MUX?

A.0

B.1

C.Can’t say

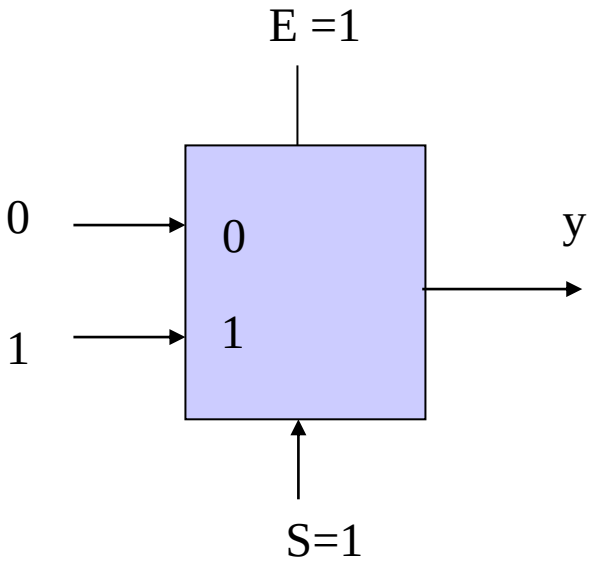

Multiplexer Definition: 4-input mux

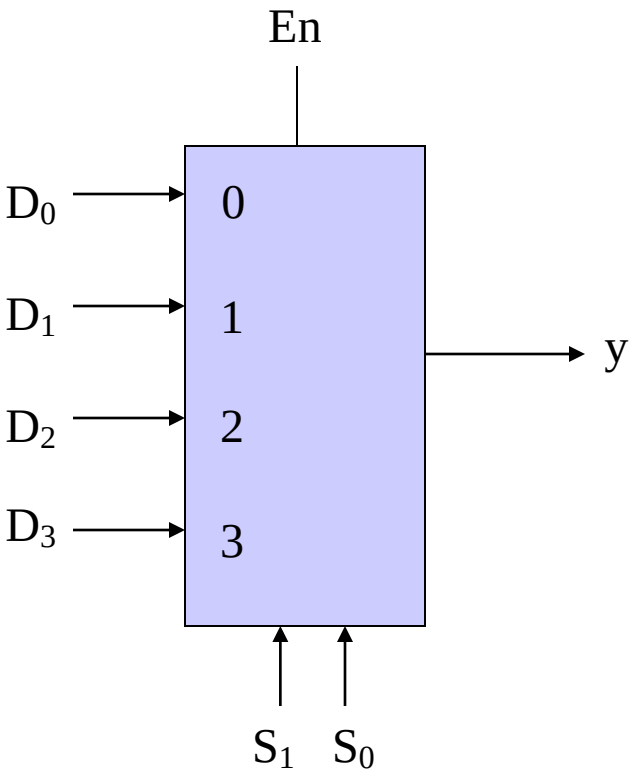

S_1	S_0	y

Multiplexer: Logic Diagram

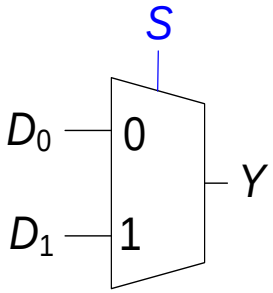

S	D_1	D_0	Y
0	0	0	0
0	0	1	1
0	1	0	0
0	1	1	1
1	0	0	0
1	0	1	0
1	1	0	1
1	1	1	1

- Logic gates
  - Sum-of-products

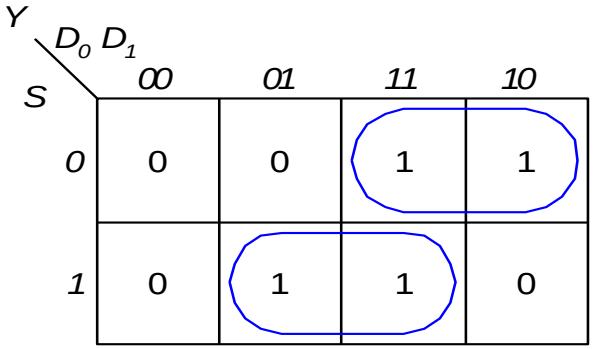

$$Y = D_0\overline{S} + D_1 S$$

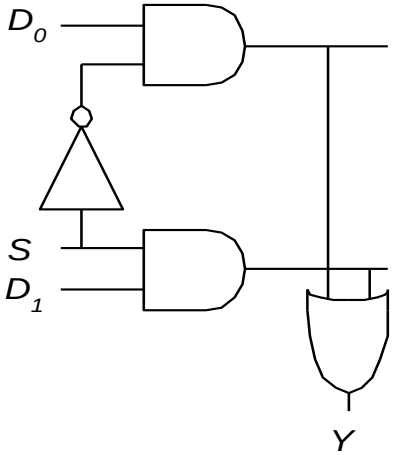

- Tristates
  - For an N-input mux, use N tristates
  - Turn on exactly one to select the appropriate input

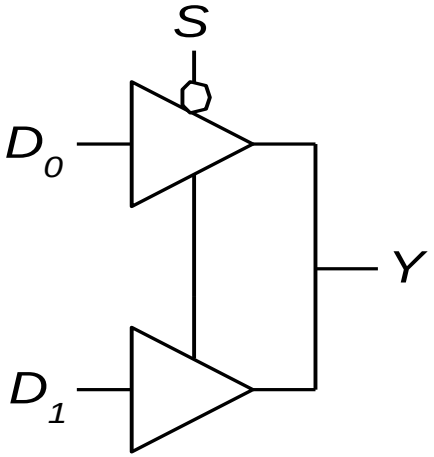

Multiplexer Application: universal set {Mux}

We use selector to decompose the function into smaller functions (less number of variables), which follows Shannon's expansion.
We simplify the decomposed functions using K-map, which follows consensus theorem.

Multiplexer Application

- Mux for a Boolean function with truth table as input
- Building blocks of FPGA (Field Programmable Gate Array).

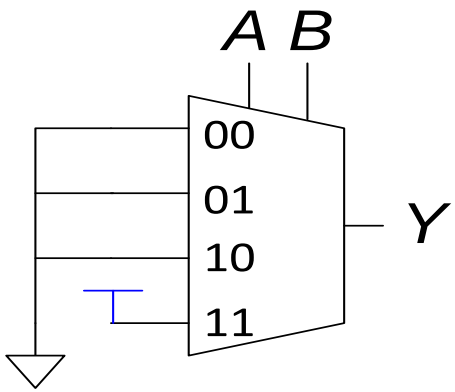

For the logic diagram on left, output Y is

A. AB
B. (AB)'
C. A+B
D. (A+B)'
E. None of the above

Multiplexer Application: universal set {Mux}

Example 1: Given f (a,b,c) = Σm (0,1,7) + Σd(2), implement with an 8-input Mux.

id	abc	f
0	000	1
1	001	1
2	010	-
3	011	0
4	100	0
5	101	0
6	110	0
7	111	1

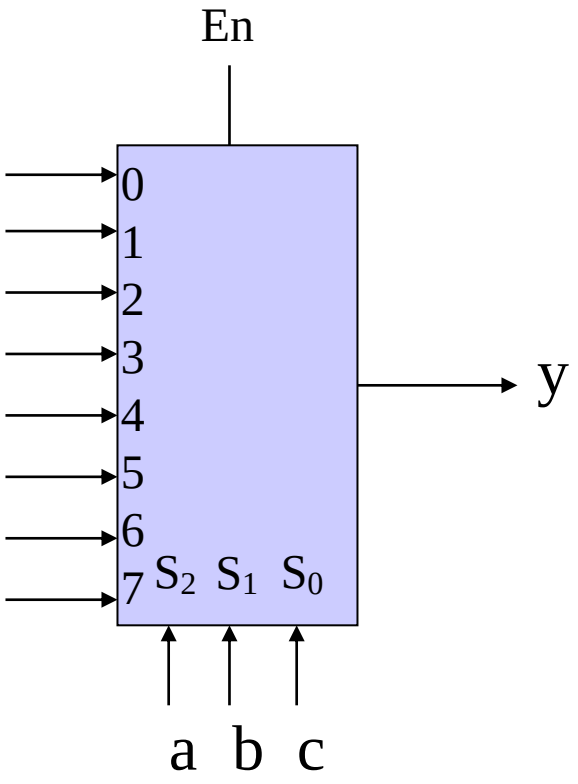

Example 2: Given f (a,b,c) = Σm (0,1,7) + Σd(2), implement with 4-input Muxes.

ab	c=0	c=1	D
00			D_0
01			D_1
10			D_2
11			D_3

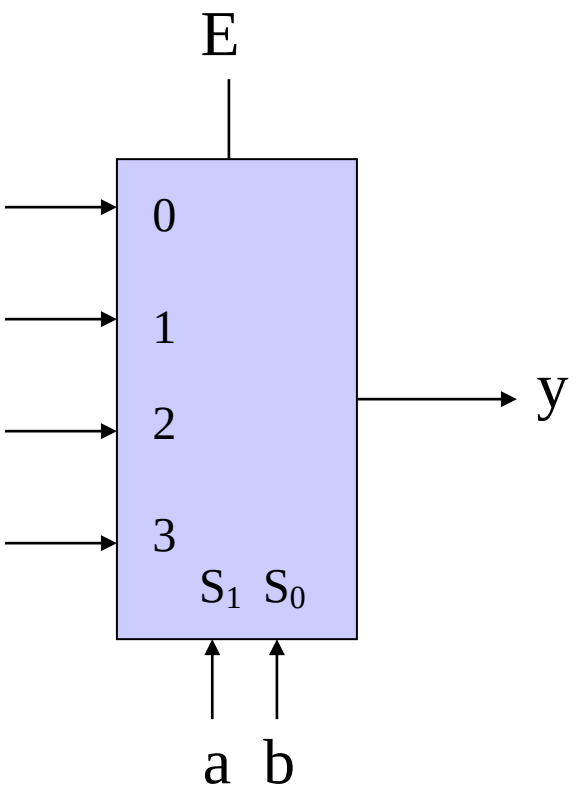

Example 3: Given f (a,b,c) = Σm (0,1,7) + Σd(2), implement with 2-input Muxes.

a\bc	00	01	10	11	D(b,c)
0	1	1	-	0	D_0
1	0	0	0	1	D_1

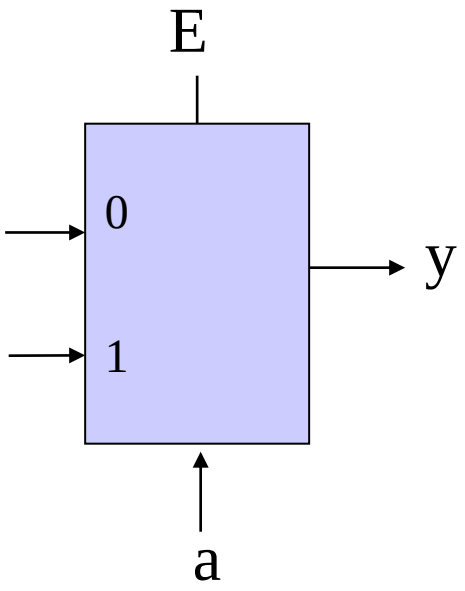

Example 3: Given f (a,b,c) = Σm (0,1,7) + Σd(2), implement with 2-input Muxes.

a\bc	00	01	10	11	D(b,c)
0	1	1	-	0	D_0
1	0	0	0	1	D_1

D_0 (b,c) = b'

c=0	1	-
c=1	1	0
	b=0	b=1

D_1 (b,c) = bc

c=0	0	0
c=1	0	1
	b=0	b=1

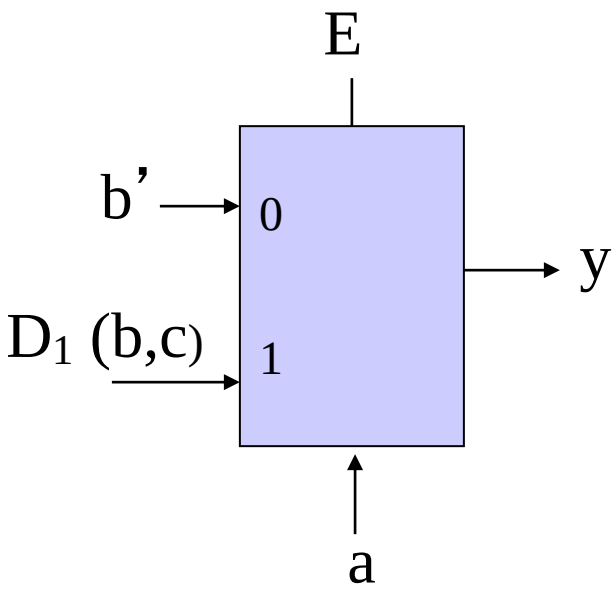

Example 3: Given f (a,b,c) = Σm (0,1,7) + Σd(2), implement with 2-input Muxes.

D_1 (b,c)

b\c	0	1	D
0	0	0	D_0=
1	0	1	D_1=

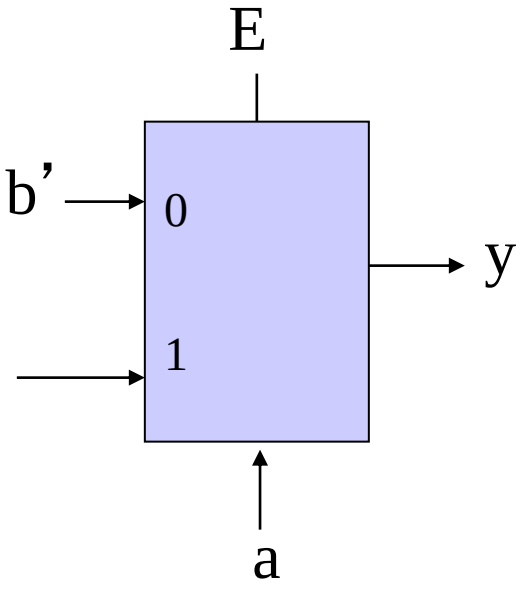

Example 3: Given f (a,b,c) = Σm (0,1,7) + Σd(2), implement with 2-input Muxes.

D_1 (b,c)

b\c	0	1	D
0	0	0	D_0=0
1	0	1	D_1=c

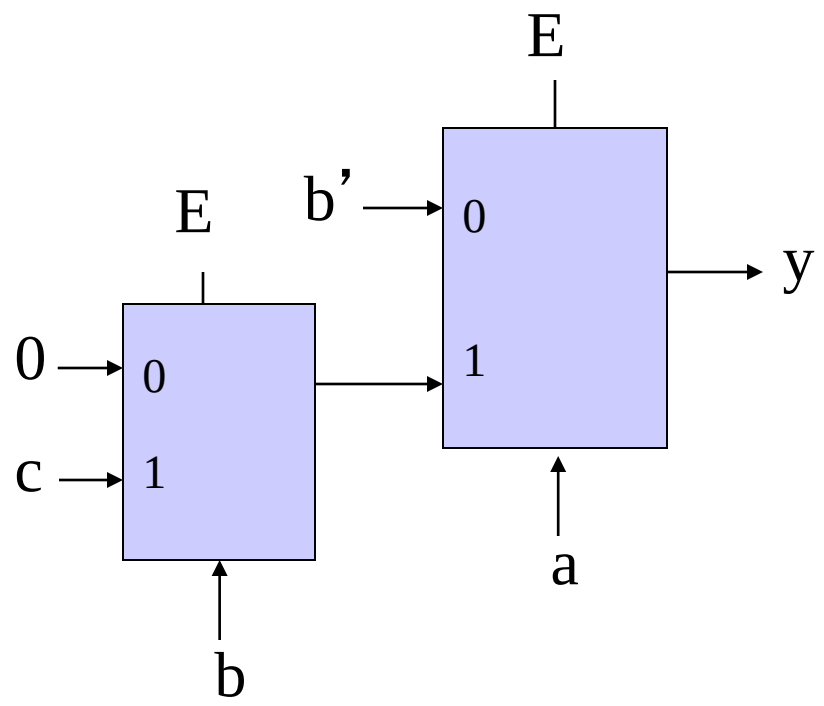

Example 4: Given f (a,b,c) = Σm (0,2,4,7) + Σd(3,5), implement with 2-input Muxes.

a\bc	00	01	10	11	D
0	1	0	1	-	D_0
1	1	-	0	1	D_1

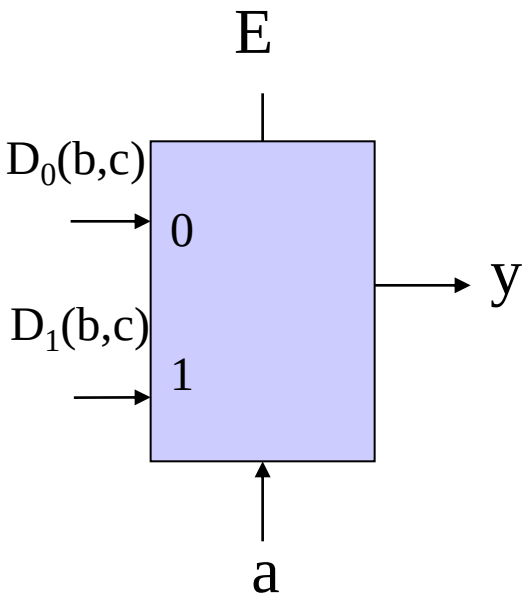

4. Demultiplexers

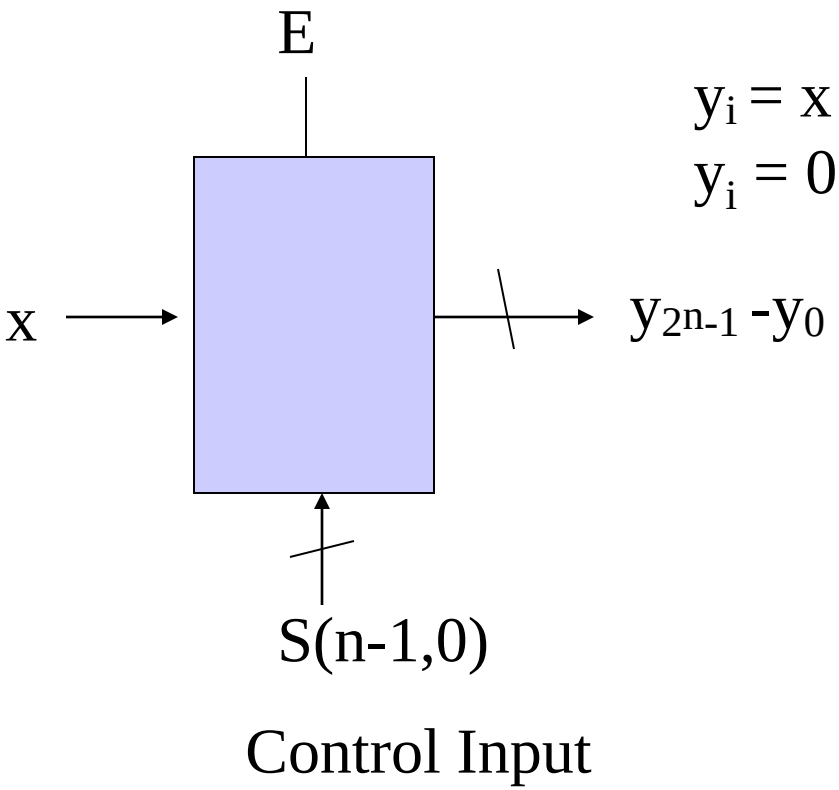

$y_i = x$ if $i = (S_{n-1}, .. , S_0)$ & $E=1$

$y_i = 0$ otherwise

Shifters

- **Logical shifter:** shifts value to left or right and fills empty spaces with 0's
  - Ex: 11001 >> 2 = 00110
  - Ex: 11001 << 2 = 00100
- **Arithmetic shifter:** same as logical shifter, but on right shift, fills empty spaces with the old most significant bit (msb).
  - Ex: 11001 >>> 2 = **11**110
  - Ex: 11001 <<< 2 = 00100
- **Rotator:** rotates bits in a circle, such that bits shifted off one end are shifted into the other end
  - Ex: 11001 ROR 2 = 01110
  - Ex: 11001 ROL 2 = 00111

Shifter

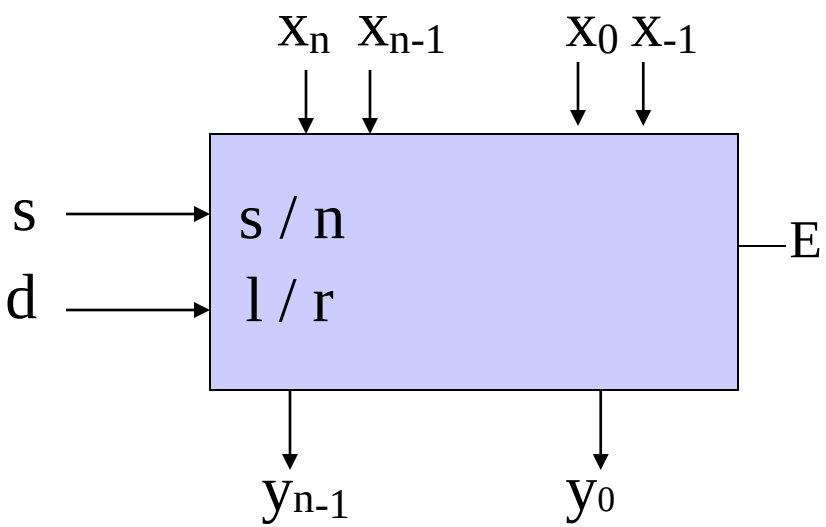

$y_i = x_{i-1}$ if E = 1, s = 1, and d = L
$= x_{i+1}$ if E = 1, s = 1, and d = R
$= x_i$ if E = 1, s = 0
$= 0$ if E = 0

Can be implemented with a mux

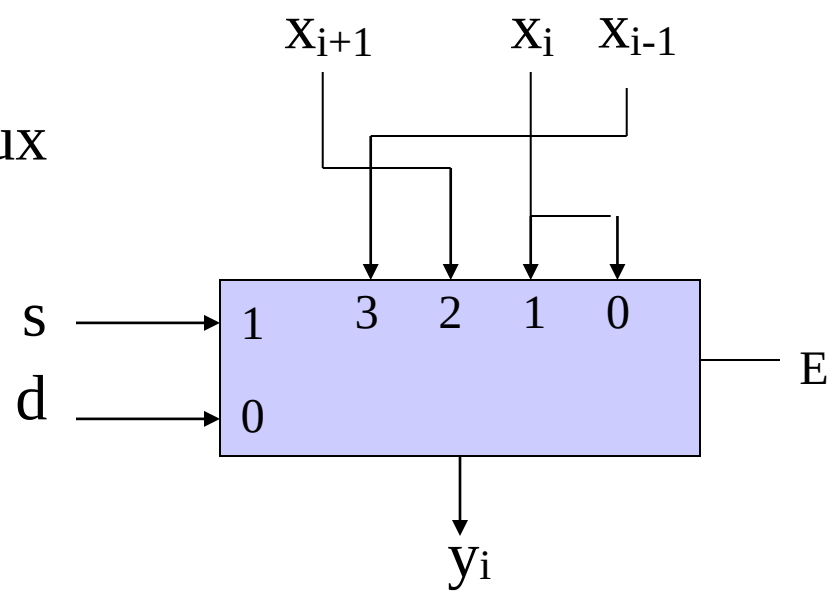

Shifter Design

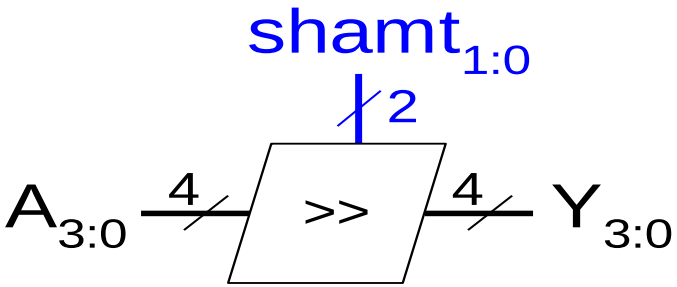

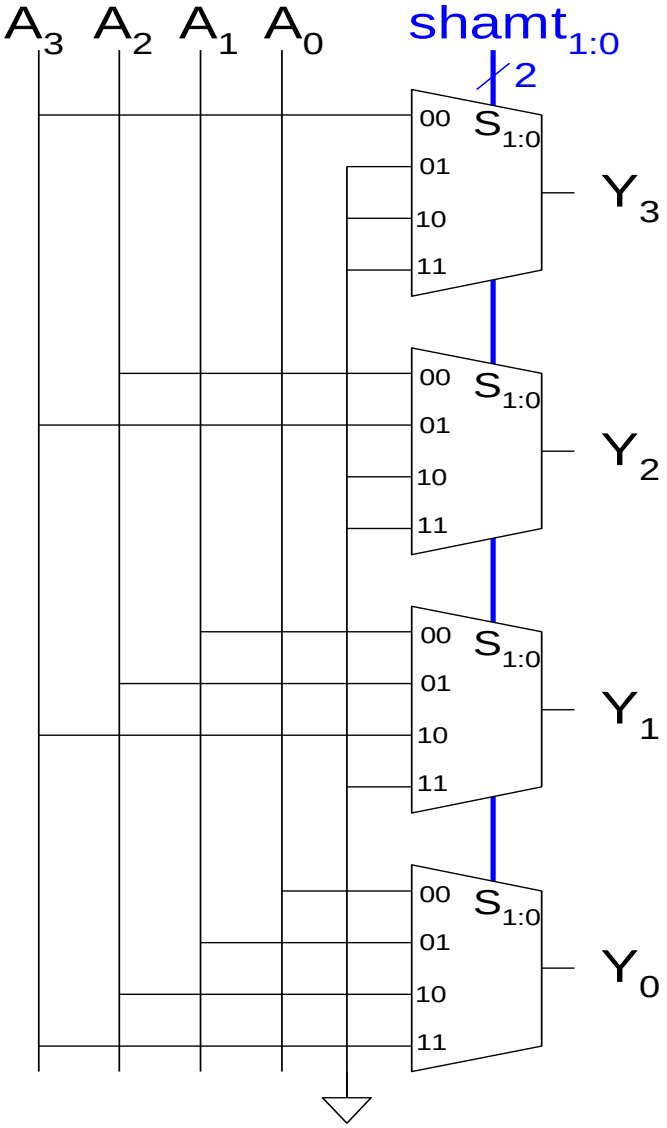

Barrel Shifter

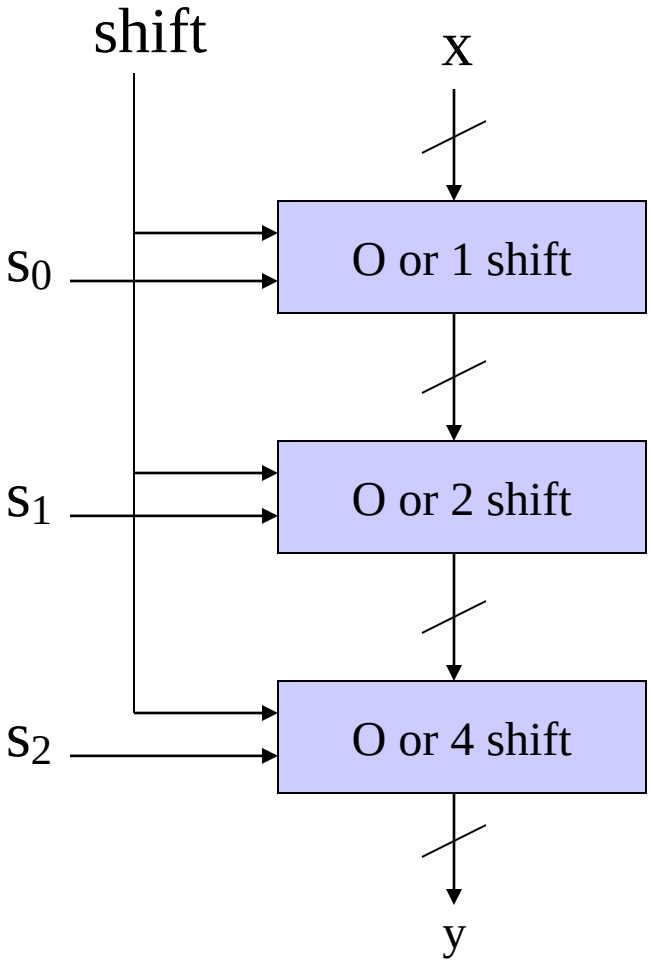

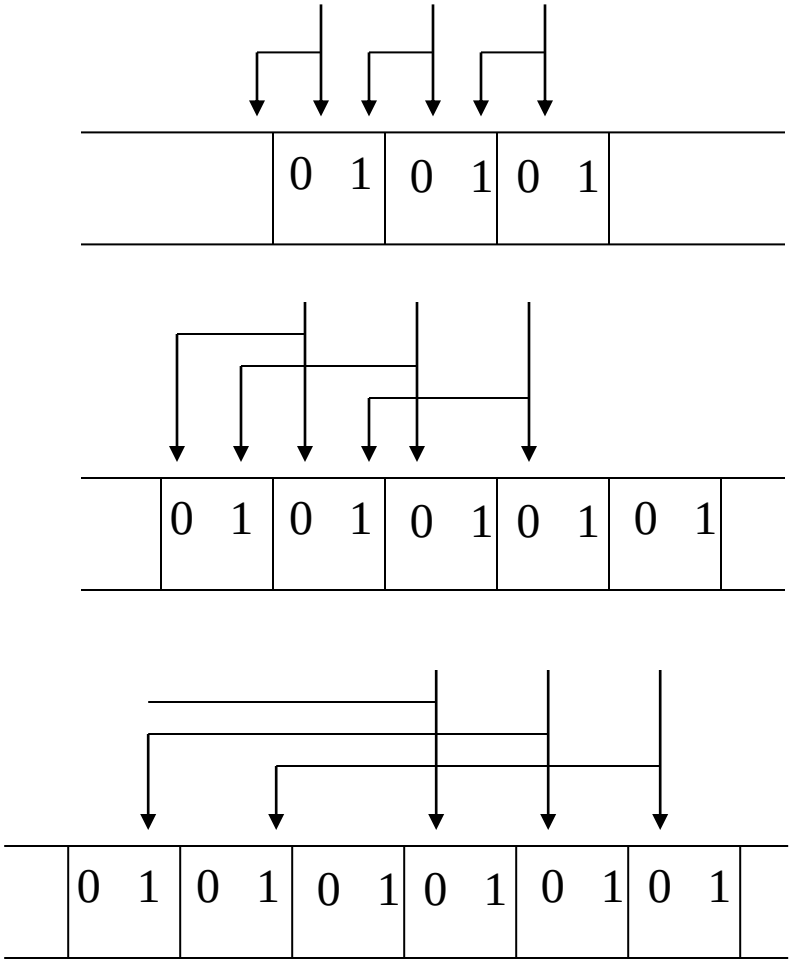

Shifters as Multipliers and Dividers

- A left shift by N bits multiplies a number by 2^N
  - Ex: 00001 << 2 = 00100 ($1 \times 2^2 = 4$)
  - Ex: 11101 << 2 = 10100 ($-3 \times 2^2 = -12$)

- The arithmetic right shift by N divides a number by 2^N
  - Ex: 01000 >>> 2 = 00010 ($8 \div 2^2 = 2$)
  - Ex: 10000 >>> 2 = 11100 ($-16 \div 2^2 = -4$)