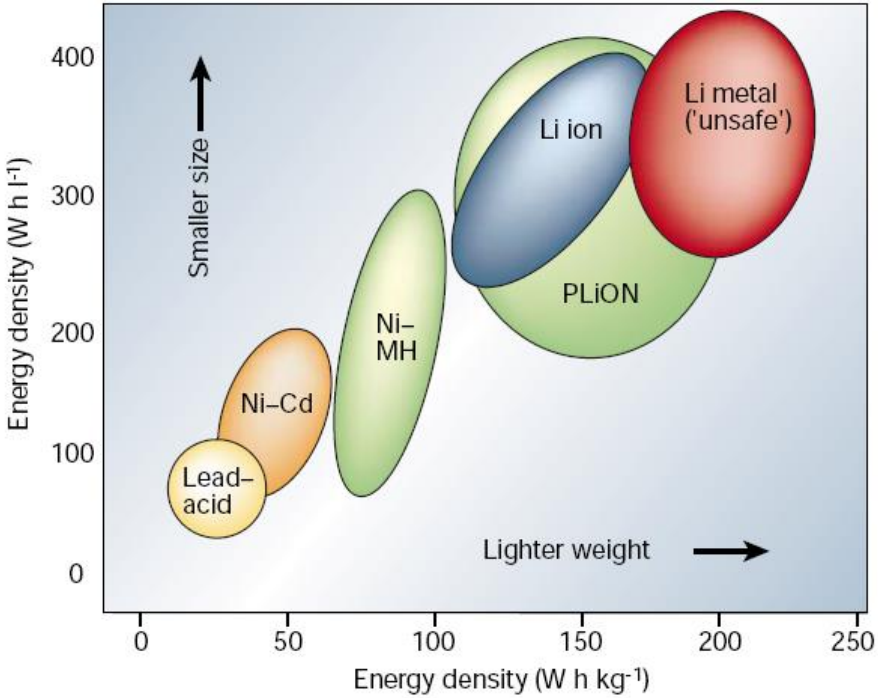

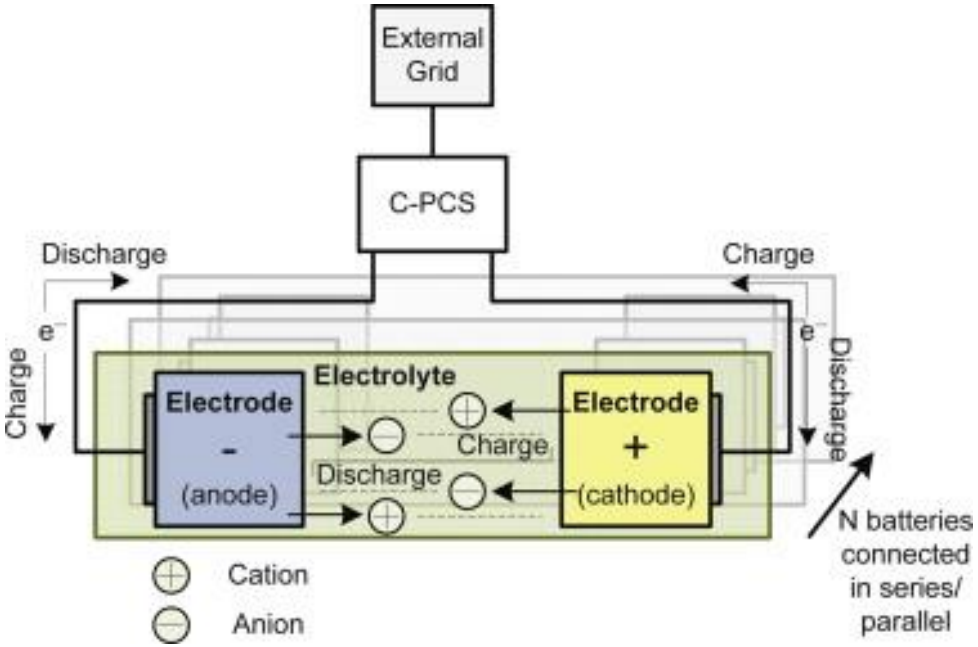

Li-Ion battery Model

Octavio Salazar

Energy Storage-
Lithium Ion Batteries

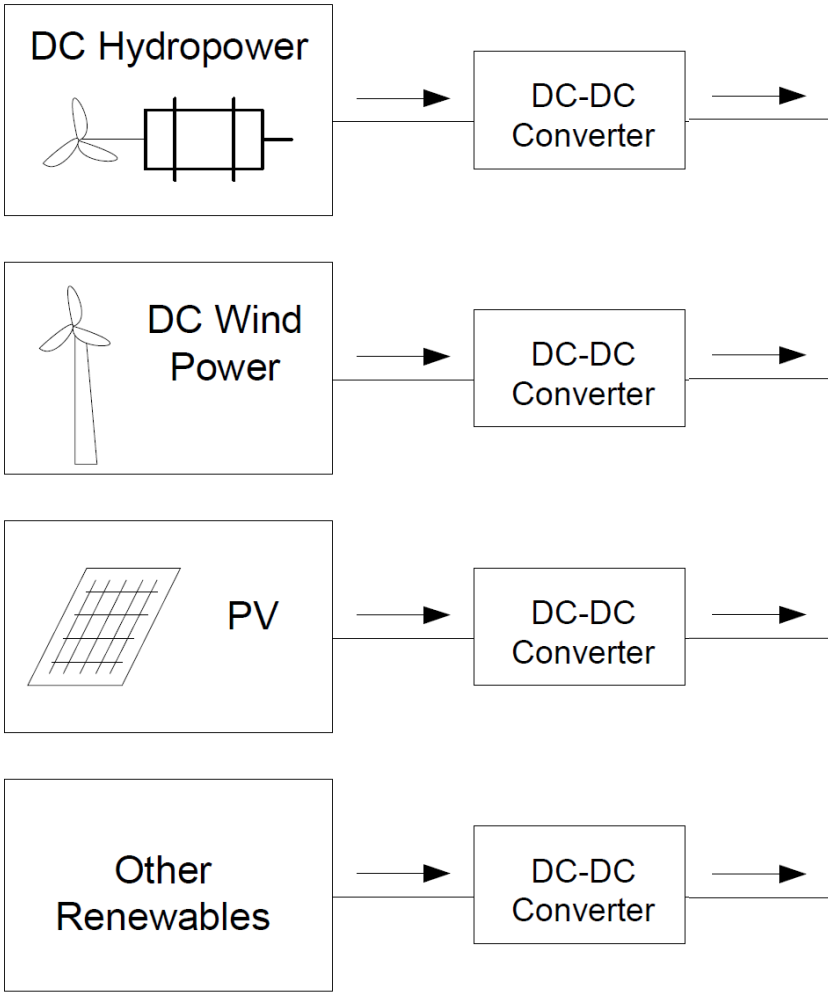

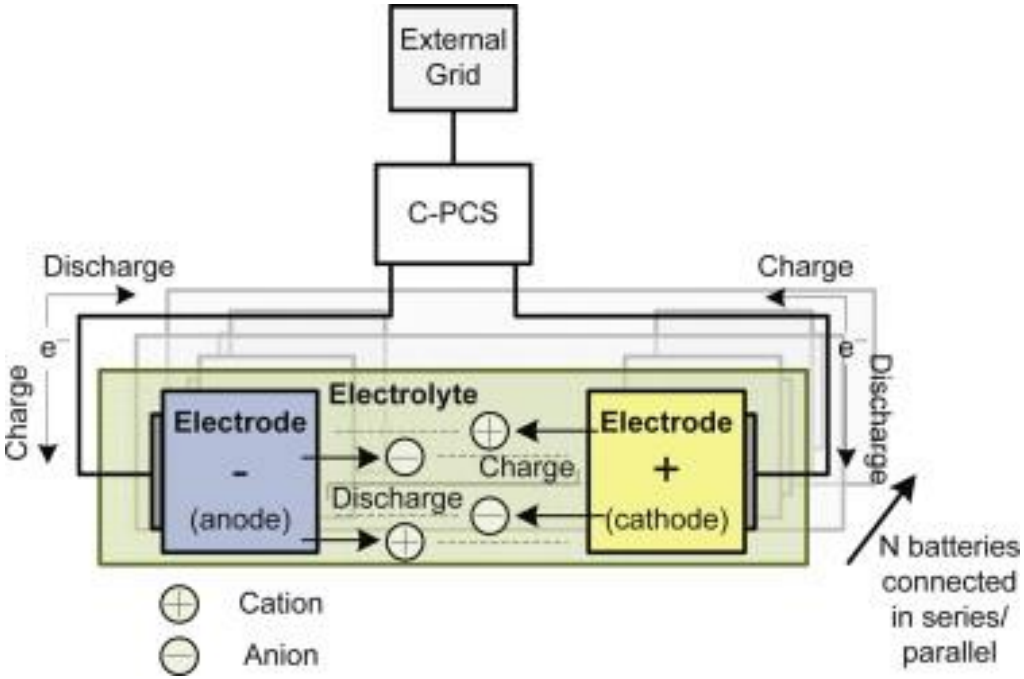

C-PCS: Control and Power Conditioning System

Energy Storage-
Lithium Ion Batteries

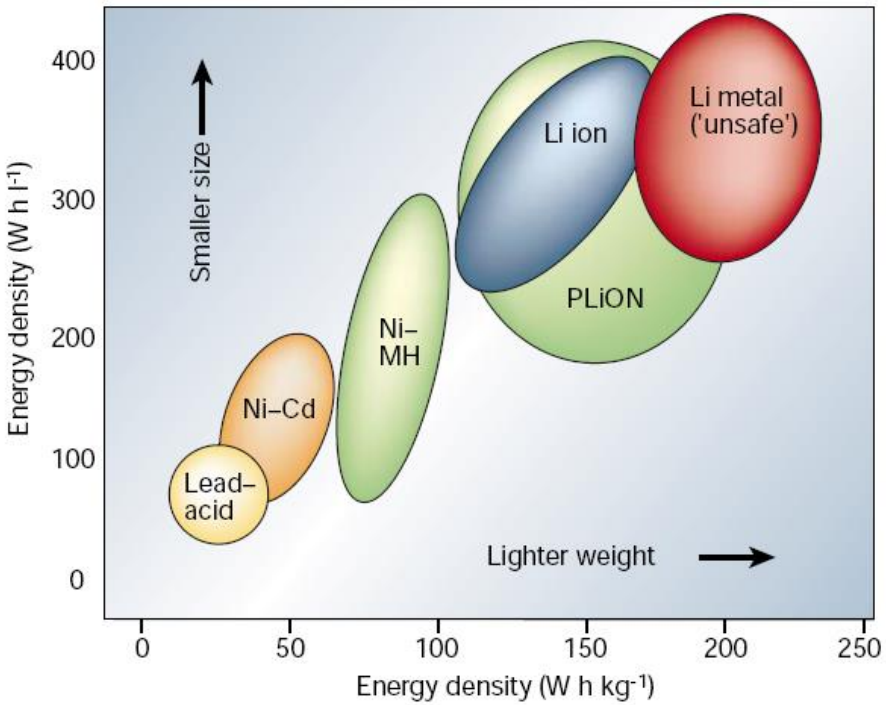

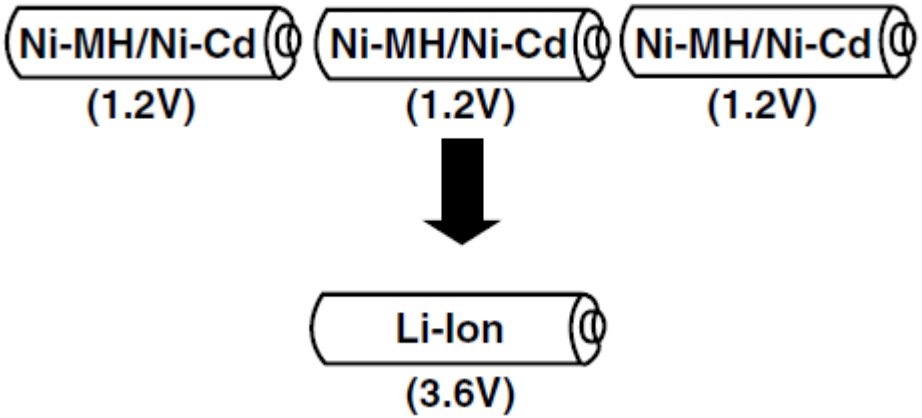

Battery Capacity and C-rate

Battery Capacity
A battery's capacity is measured in Amp-hours, called "C". This is the *theoretical* amount of current a battery delivers when discharged in one hour to the point of 100% depth of discharge

C-Rate (a.k.a. Charge rate, Hourly Rate)
The C rate is often used to describe battery loads or battery charging. 1C is the capacity rating (Amp-hour) of the battery.

C-Rate	C-Rate	Hours of Discharge
1C (1 hour rate)	1C	1 hour
C/4 (4 hour rate)	0.25C	4 hours
C/10 (10 hour rate)	0.1C	10 hours

Example:
Battery capacity= 1500mAh
1C=1500mA
2C=3000mA
0.5C=750mA

BMS = Battery Monitoring System
SoC=State of Charge
CC = Coulomb Counter (Accumulated Charge)
UUC = Unusable Charge
FCC = Full Charge Capacity of Battery
OCV = open-circuit voltage
PC = Battery Percentage Charge
RUC = Remaining Usable Charge
RC = Remaining Charge

Battery basics- lithium-ion batteries

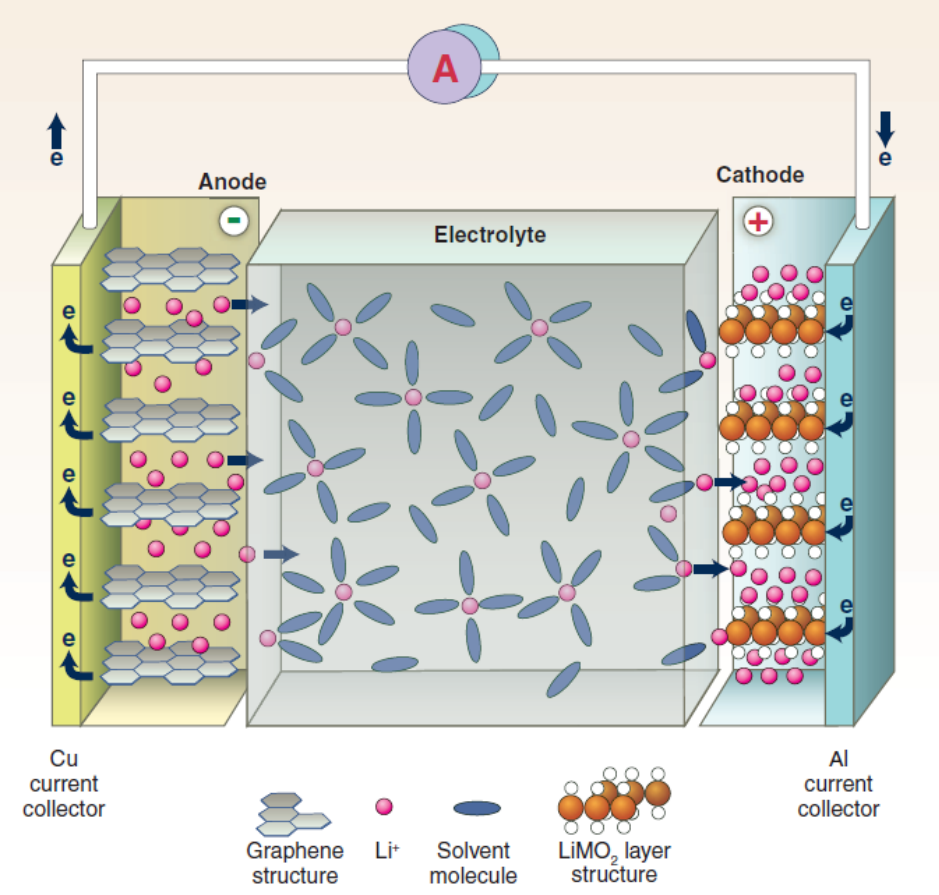

Basic Li-Ion battery lithiation Principle

Current commercial Battery performance LiCoO2, C680mAh [1]

Intercalation process

Lithium Ion batteries take advantage of the structure of graphite to intercalate Li Ions without drastically changing its initial structure

Cathode materials [2]
- Layered oxides (LiCoO2)
- Transition metal phosphates(LiFePO4)
- Spinels (LiMn2O4)

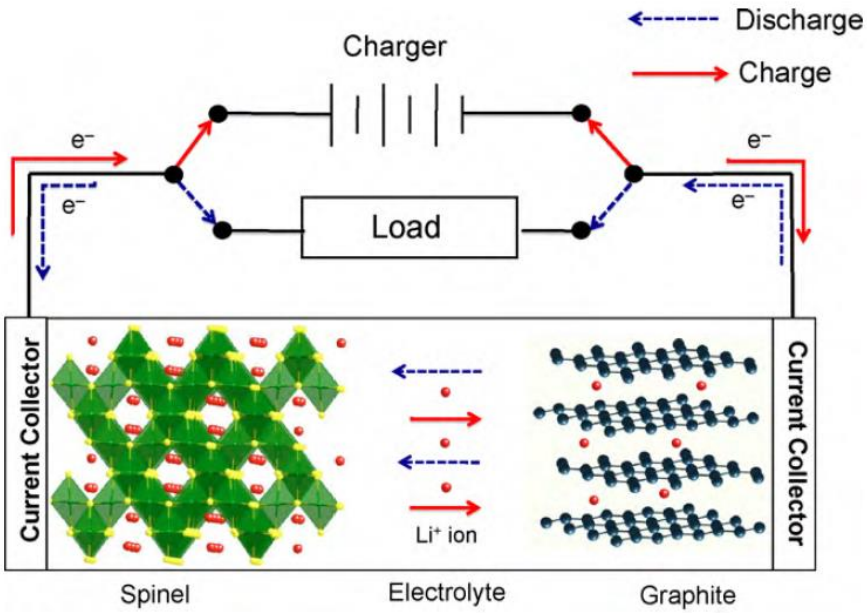

Commercially available Li-Ion batteries ($LiCoO_2$)

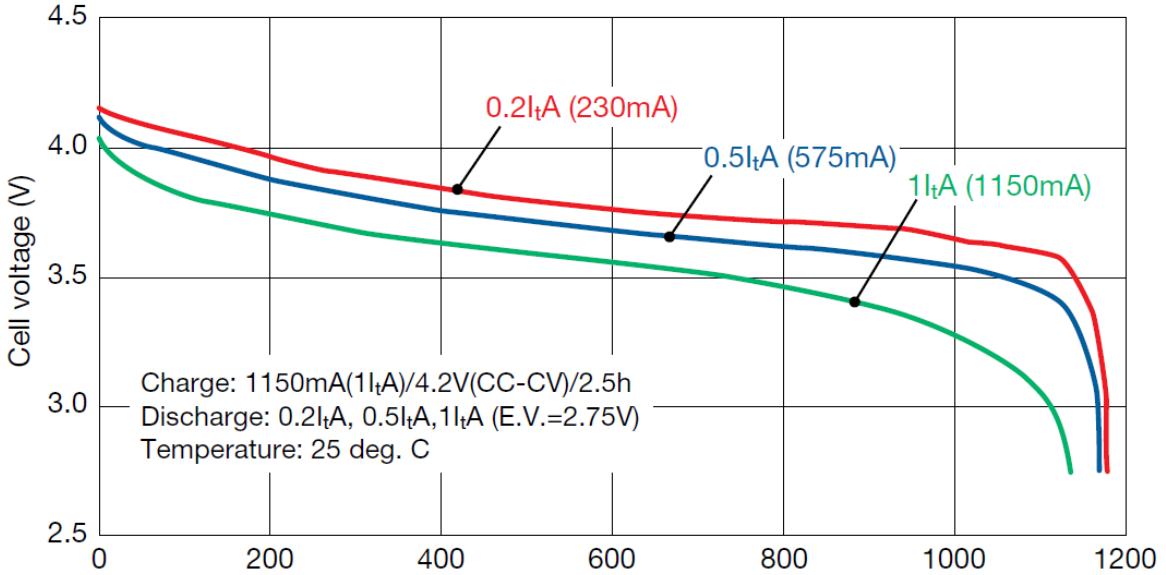

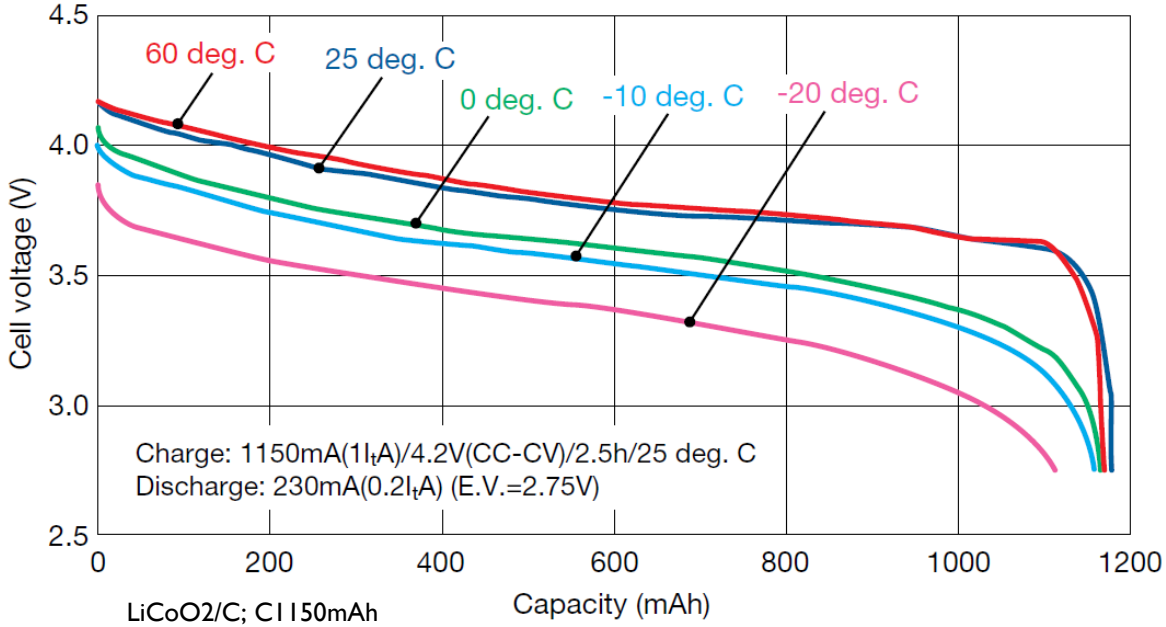

LiCoO2/C; C1150mAh
(Maxell- ICP553450SR)

$LiCoO_2$

- **Layered structure**
- 160 mAh/g
- 2d diffusion
- Industry used material

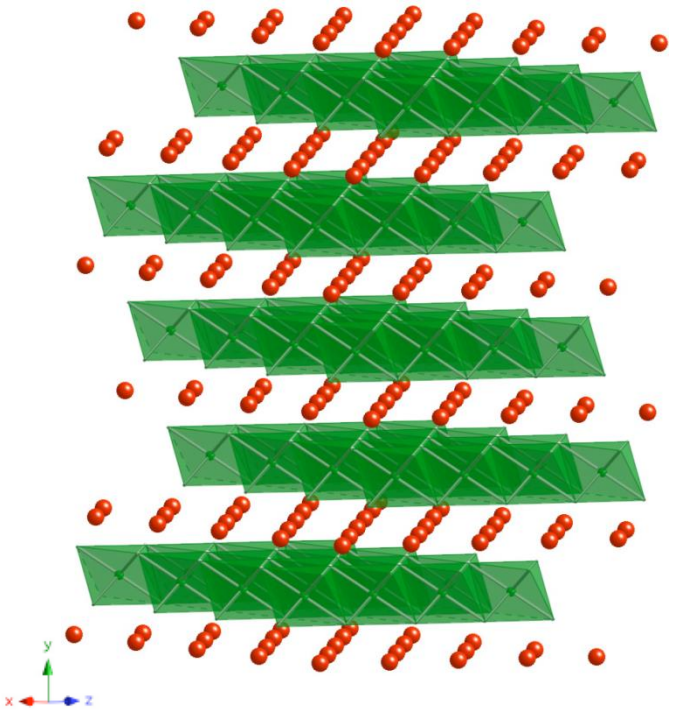

Octavio Salazar

Li-Ion batteries ($LiCoO_2$) thermal runaway

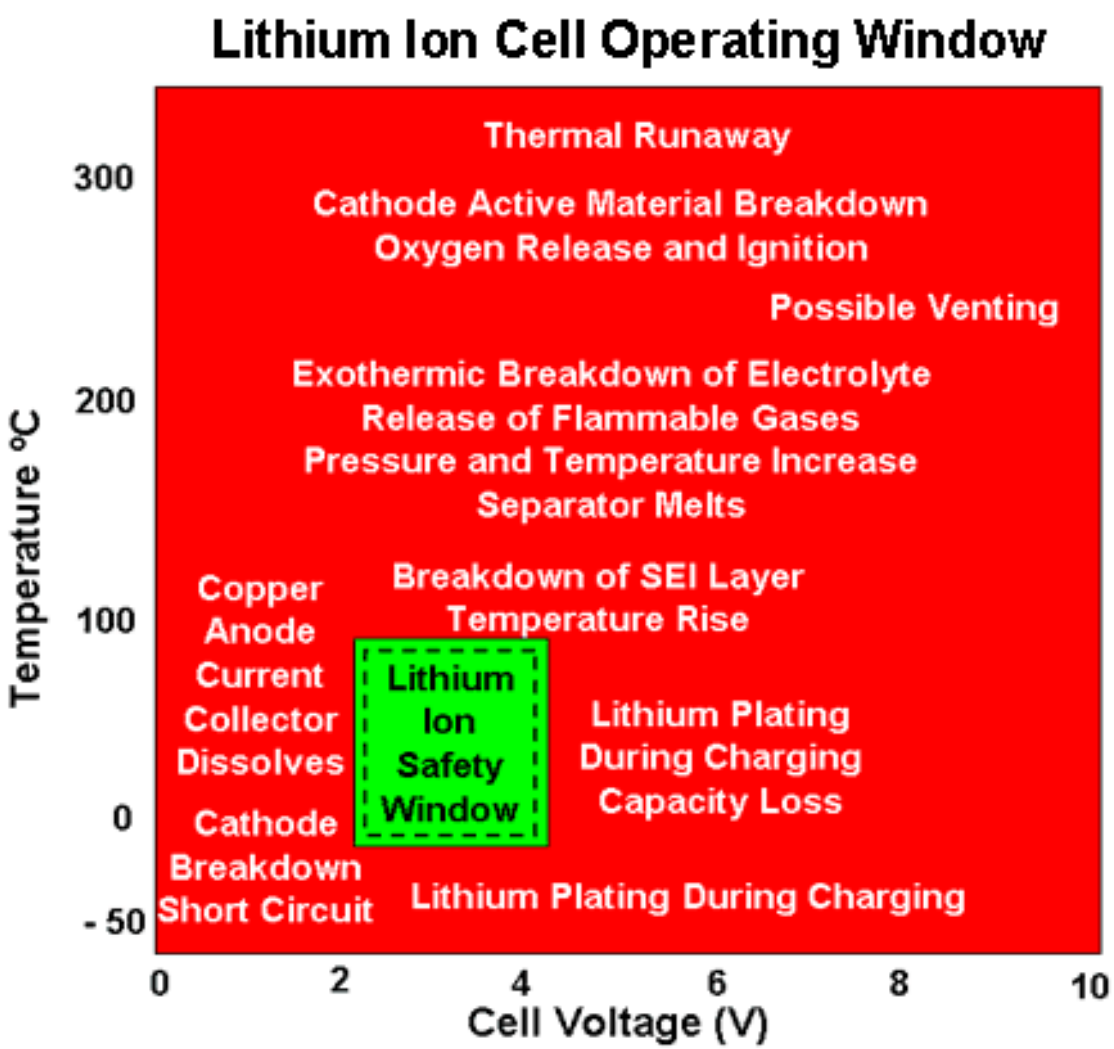

Thermal runaway:

- **80°C** : SEI layer dissolved, electrolyte reacts with electrode creating new SEI layer (exothermic reaction) increasing temp
- **80°C** : flammable gases are released from electrolyte, increase pressure (Oxygen release~110)
- **135°C** : polymer separator melt allows internal short circuit
- **200°C** : increased temperature allows metal oxide (cathode LiCoO2) breakdown releasing Oxygen enabling combustion
- Cathode breakdown is an exothermic reaction increasing temperature more

Li-Ion High temperature applications (Oil drilling, medical- heat sterilizing)

Rechargeable high temperature lithium-ion battery

VL 32600-125

Cylindrical, D-sized spiral cell
Reusable up to 200 times
in demanding >100°C environments.
More than 1000 typical oil drilling surveys up to 125°C.

Operating conditions

Charge method	Constant Current/Constant Voltage
Maximum charge voltage Recommended charge voltage range at 125°C	4.10 +/– 0.05 V 3.8 V to 4.0 V
Maximum recommended charge current	0.9 A (C/5 rate) at 20°C to 125°C
Charge temperature range	0/125°C
Maximum continuous discharge current	2.3 A (C/2 rate)
Pulse discharge current	up to 3.4 A for 2 seconds
Discharge temperature range	0/125°C

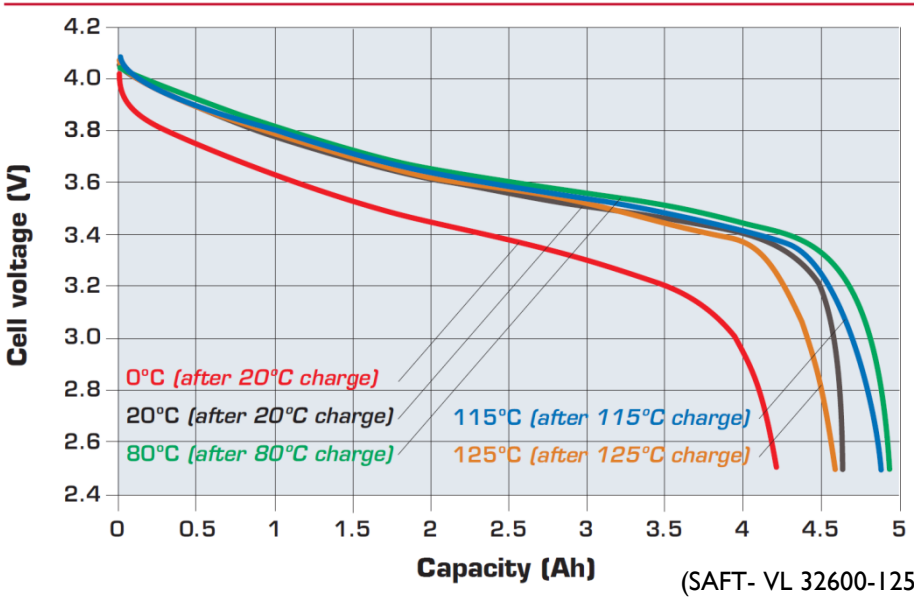

(SAFT- VL 32600-125)

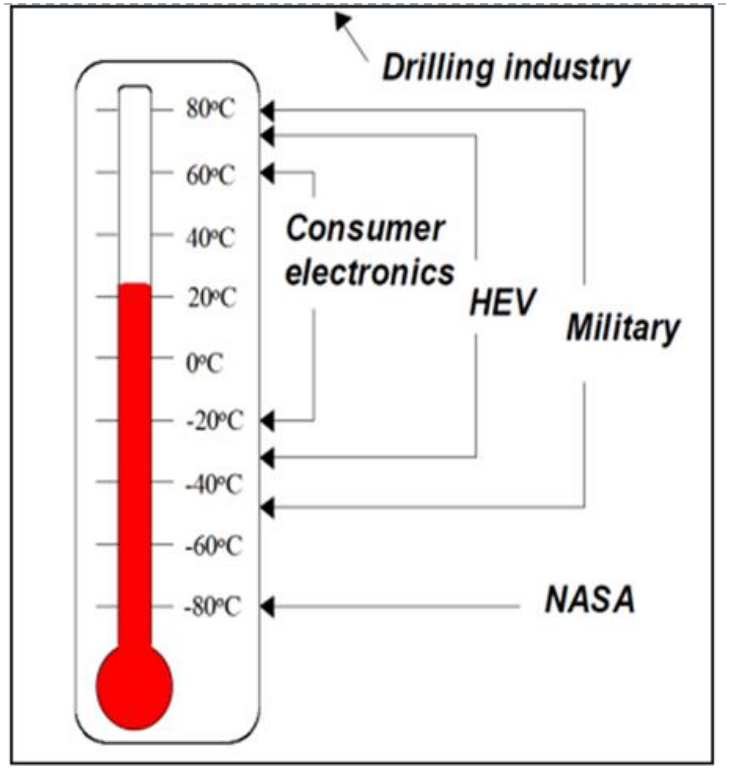

Source: "Li-Ion Battery Electrolytes Designed for a Wide Temperature Range," Tikhonov, K. and Koch V.R., Covalent Associates, Inc.

High temperature operation:

- Initial effect improves reaction rate
- High discharge rate increases power dissipation increasing temperature

Theoretical specific capacity and working potential of Lithium-Ion electrode materials

$$V_{cell} = \left| \frac{\mu_{cath}^{Li} - \mu_{an}^{Li}}{F} \right|$$

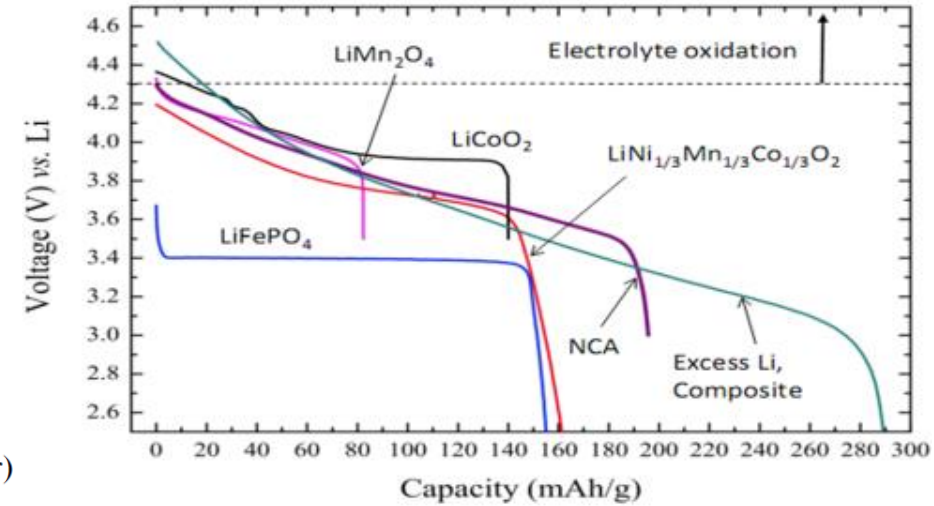

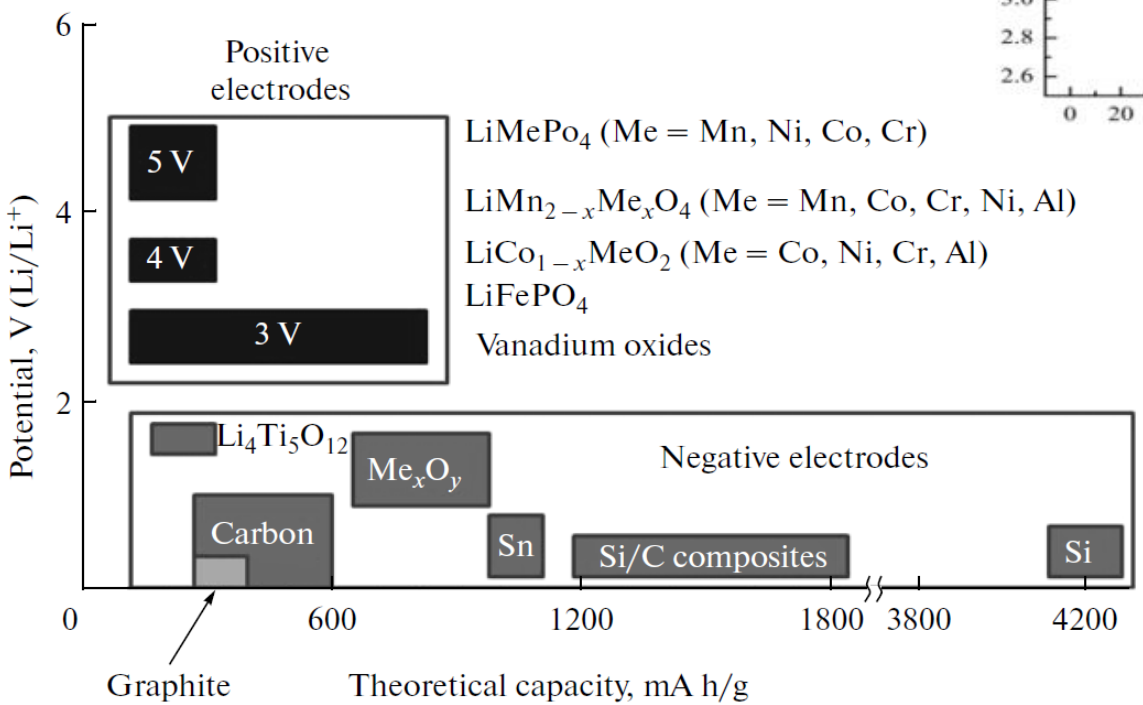

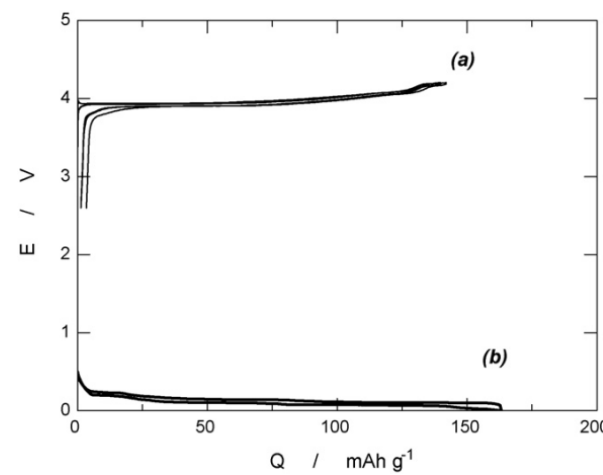

Fig. 1. A schematic of power parameters (theoretical specific capacity and working potential) of active materials for lithium-ion batteries.

Octavio Salazar

Li-Ion batteries ($LiCoO_2$)

Charge Characteristics

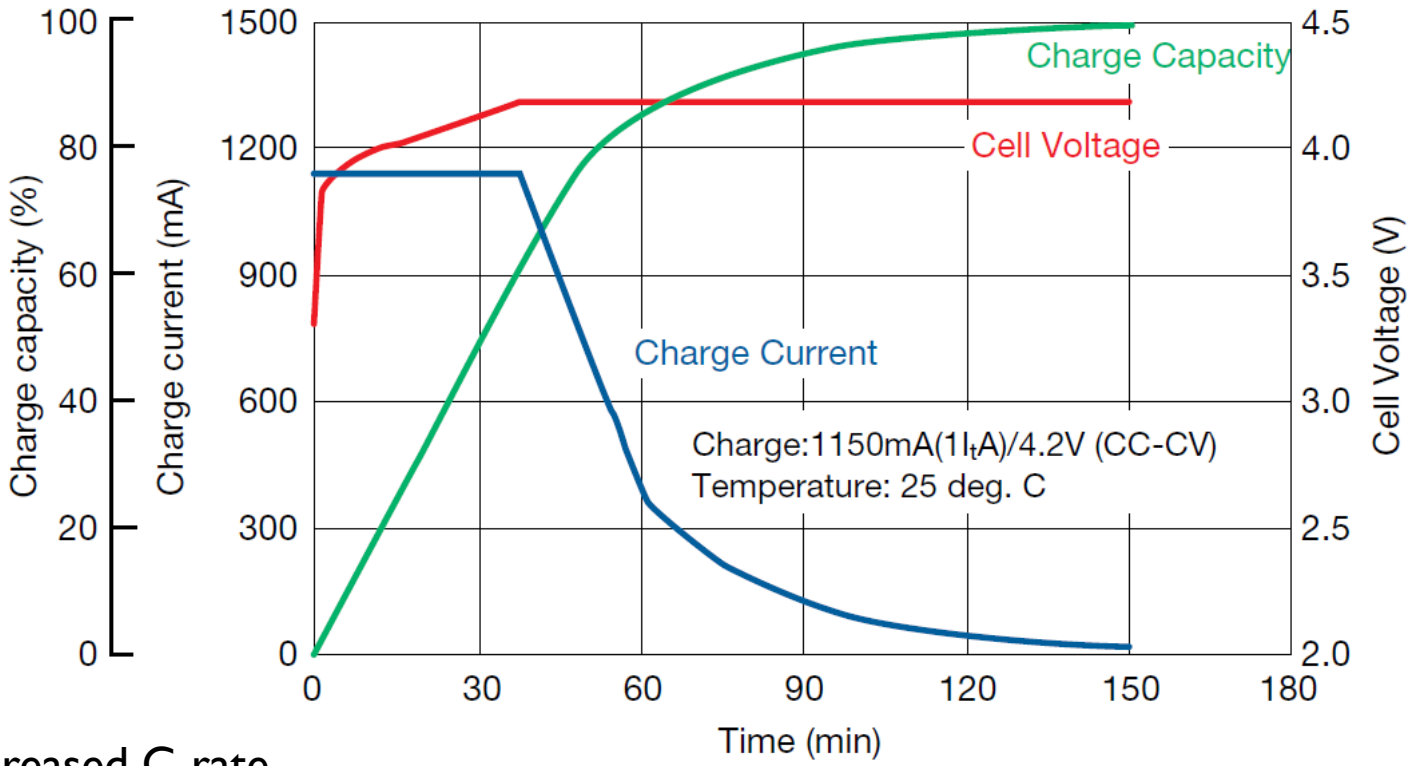

- Increased C-rate
  - Heat induced by power dissipation
  - Lithium plating (impede intercalation)
    - Capacity loss
    - Dendrite creation (preferential sites)
- High voltage
  - Electrolyte breakdown

LiCoO2/C; C1150mAh
(Maxell- ICP553450SR)

State of Charge (SOC)- Fuel gauging

- End of charge is based exclusively on cut-off voltage
- Premature cutoff due to uncertain capacity measurement results in large quantity of unused capacity
- For multi-media applications, over 25% capacity unused usually

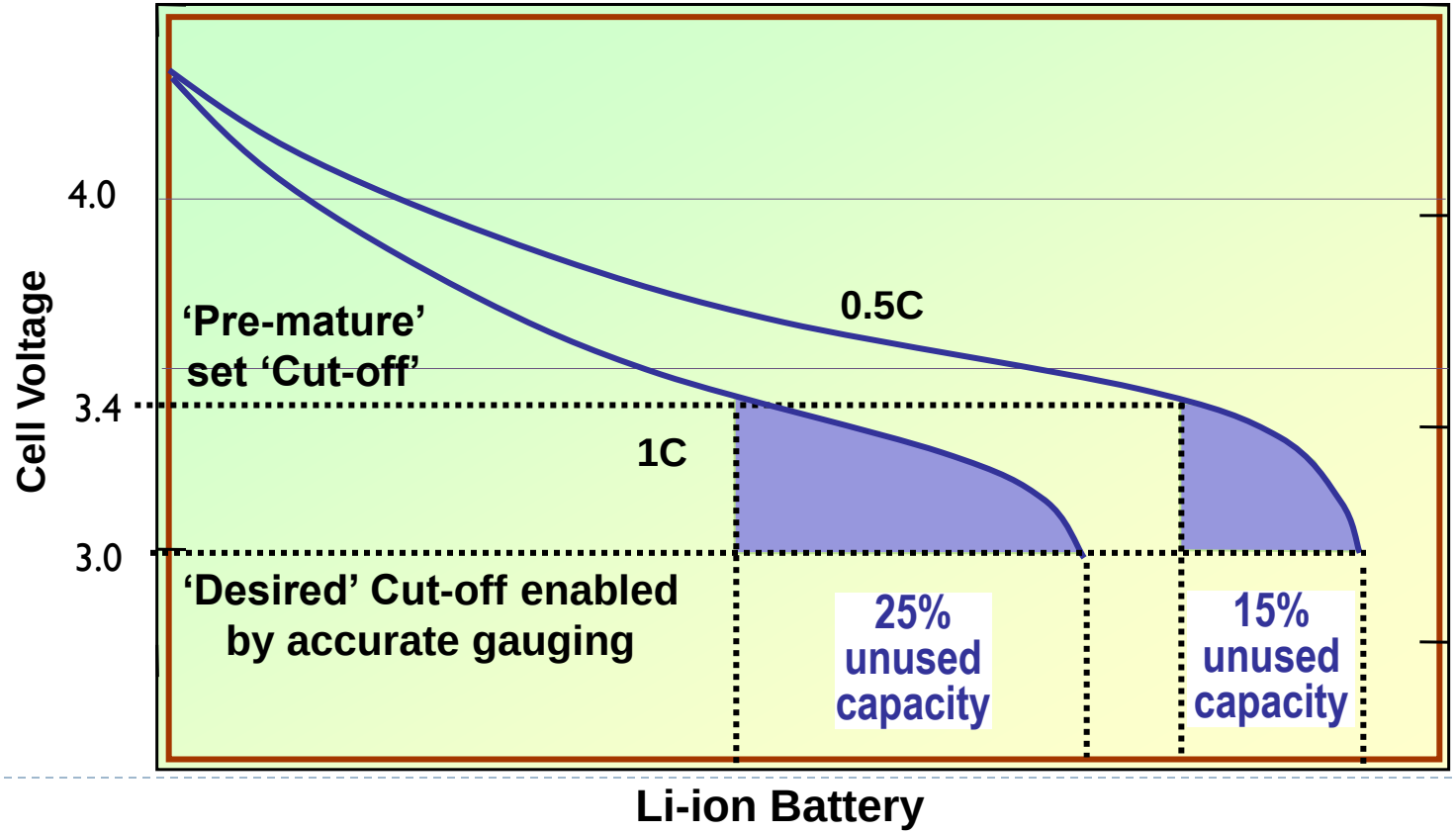

State of Charge (SOC)- Fuel gauging Li-Ion battery management

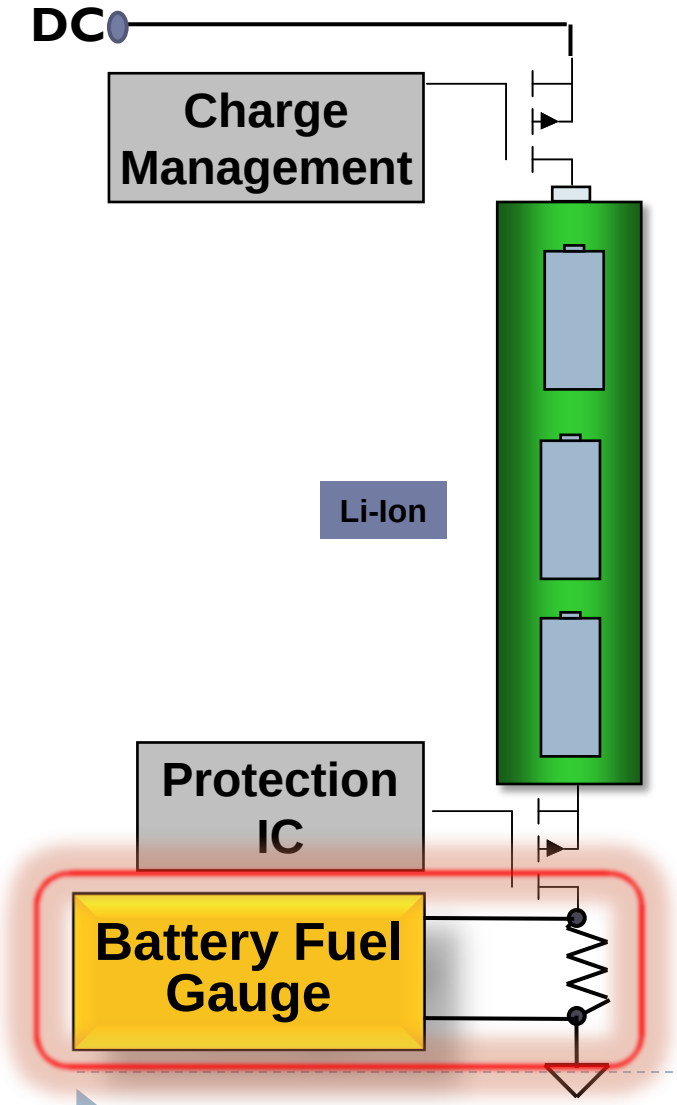

Li-Ion Battery Management

- **Battery Fuel Gauge** Uses a sense resistor to measure current in and out of the battery and calculates the battery's remaining energy. (Coulomb counting)
- **Protection IC** Ensures that a Li-Ion battery stays within safe voltage/current limits
- **Charge Management IC** converts the DC input power to a voltage/current level need to quickly and safely charge a battery.

State of Charge (SOC)- Fuel gauging battery management

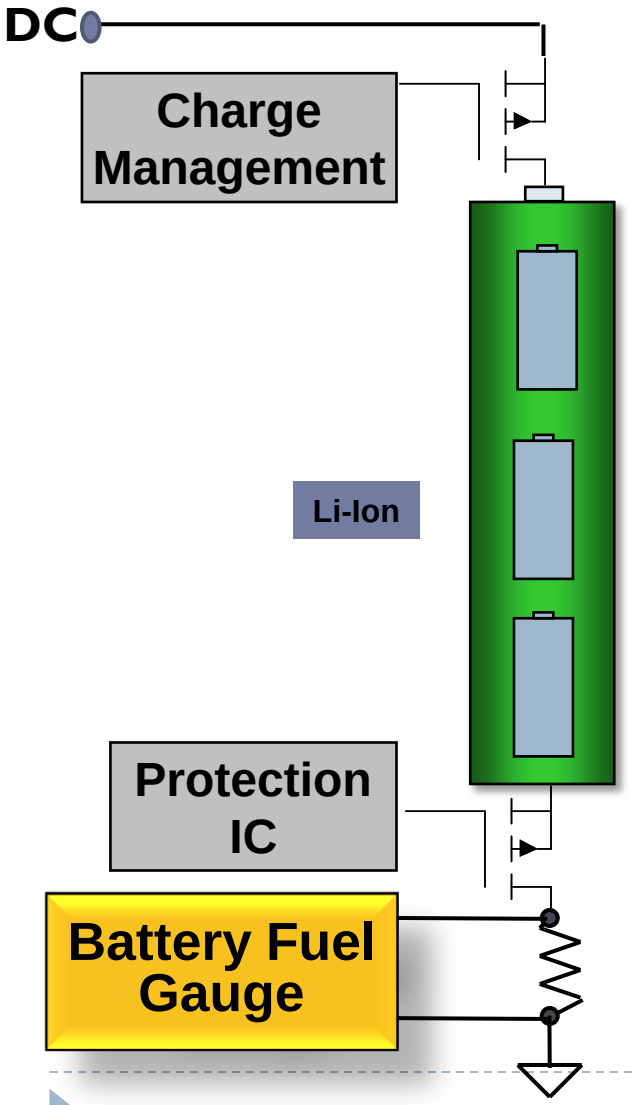

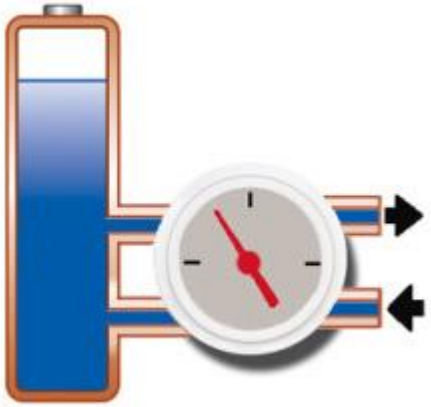

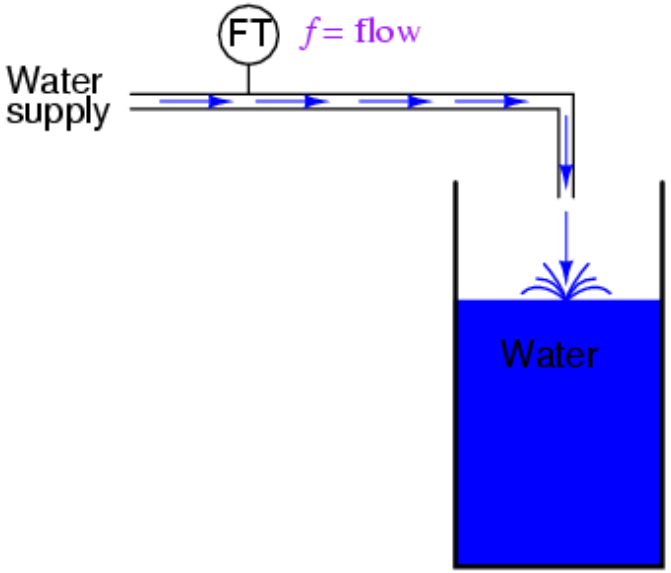

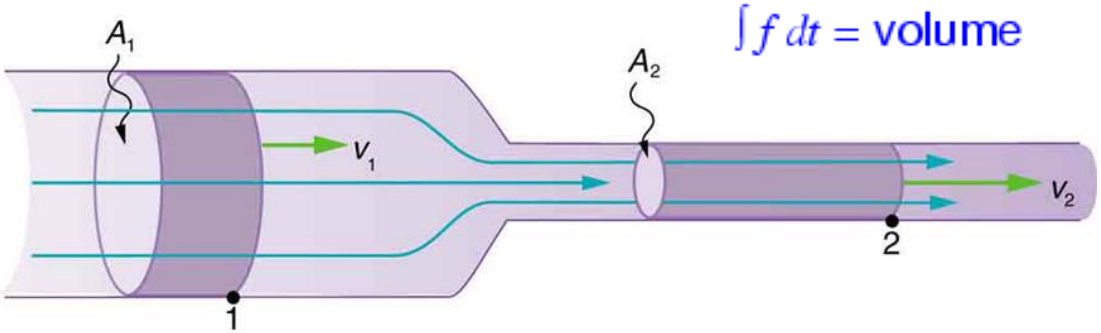

State of Charge (SOC)- Coulomb counting battery characterization- weighted tables

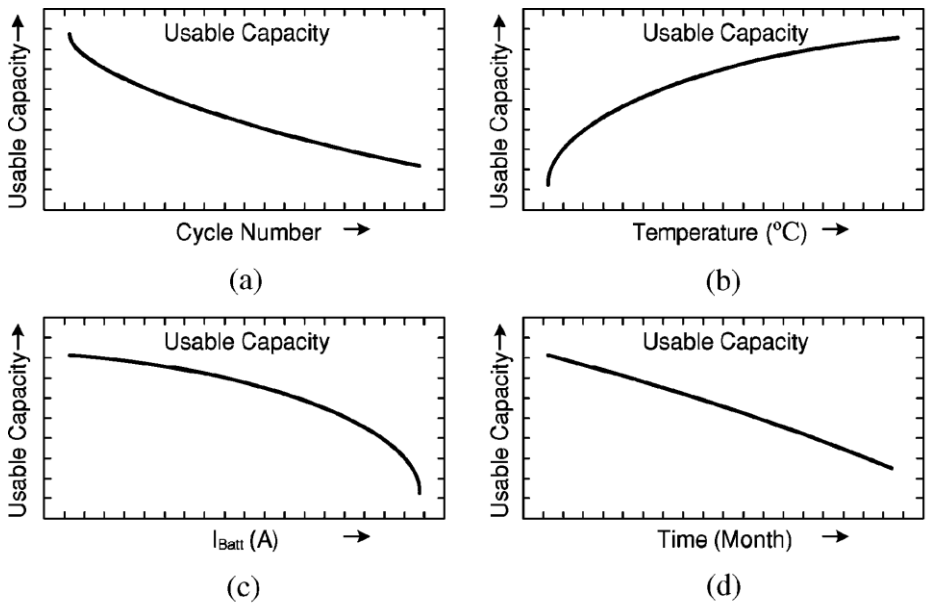

Practical SOC estimation based on coulomb counting and look up tables

Characteristics

- Cycle life
- Temperature
- Charge/discharge rate
- Self discharge

Sources of error

- Sample size validity
- In dynamic applications constant monitoring is needed
- Cumulative error build up
- Data points and algorithm
- Columbic efficiency- energy lose (as heat) due to chemical reaction

Li-Ion battery electric circuit model

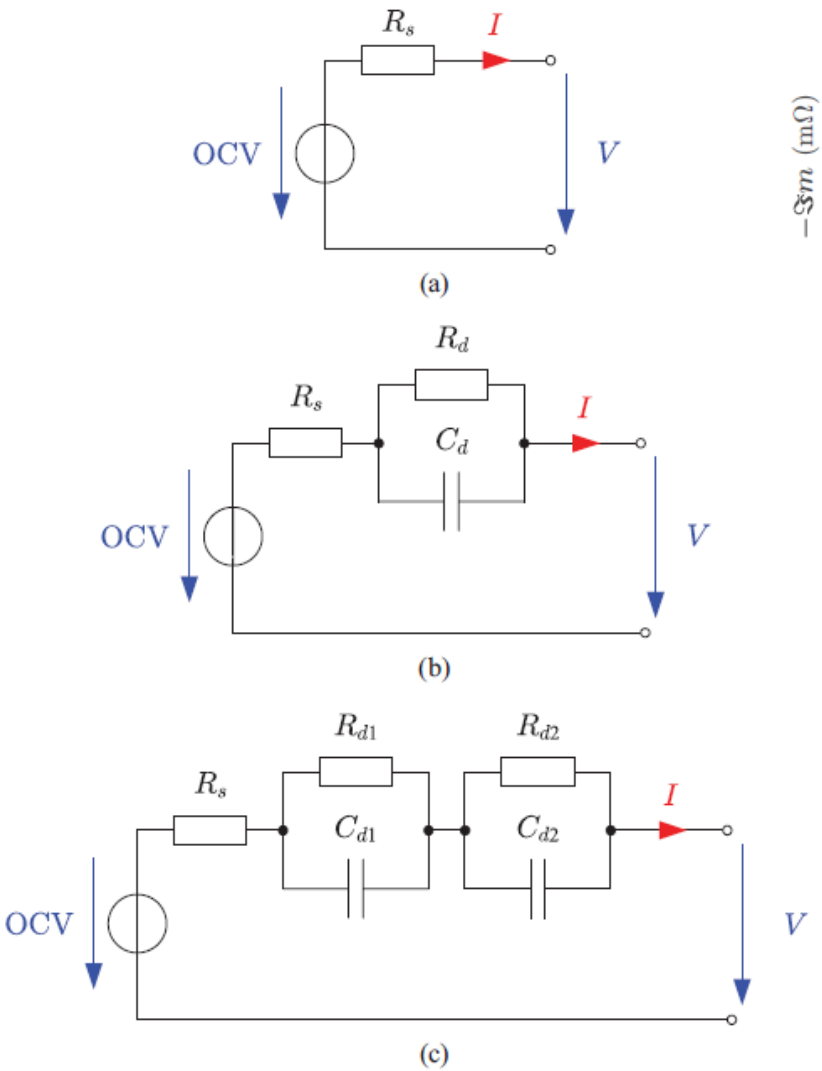

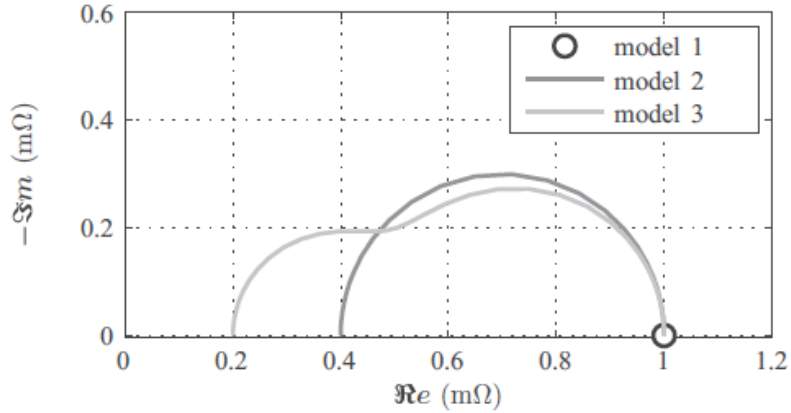

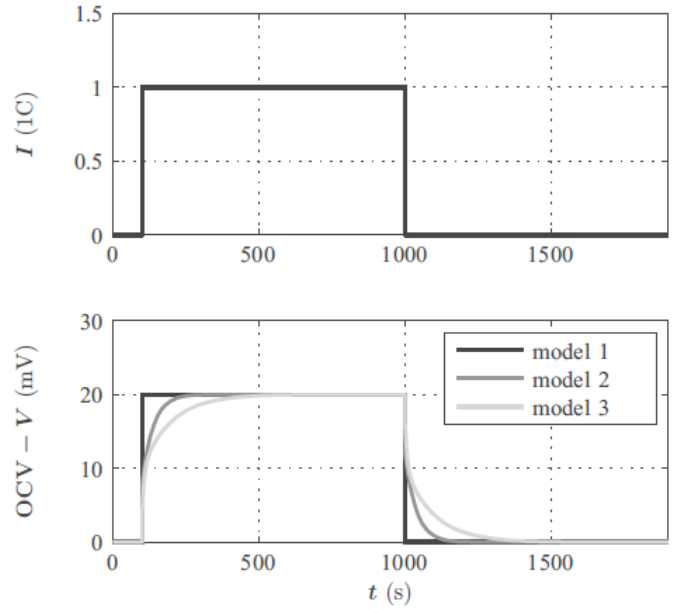

State of Charge (SOC)- Coulomb counting

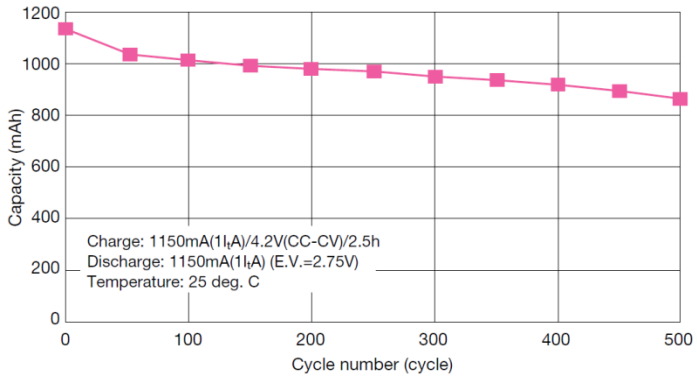

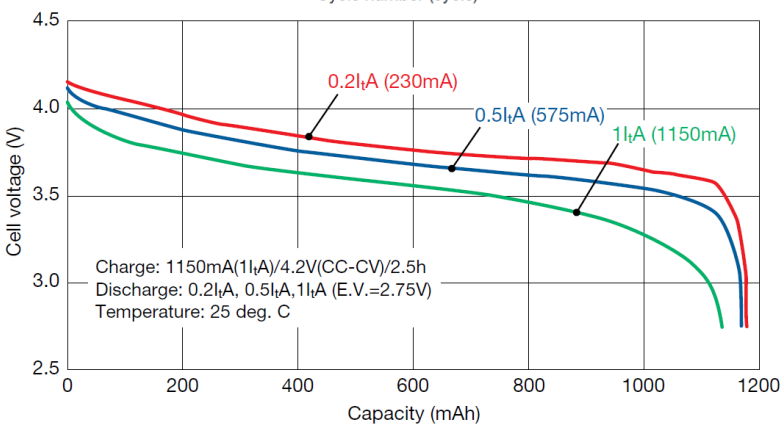

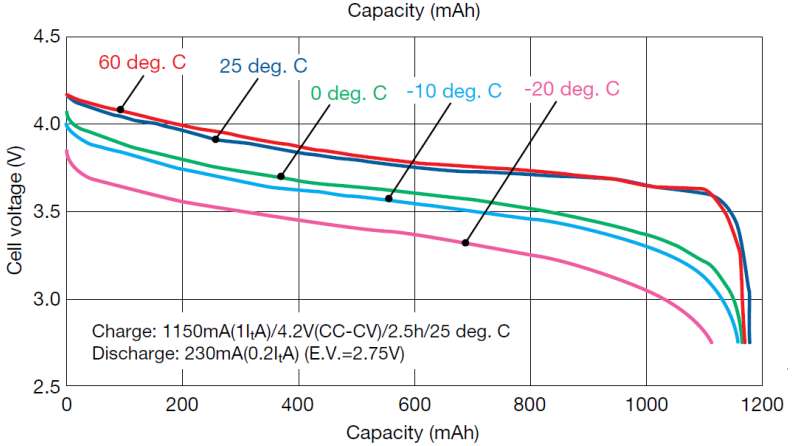

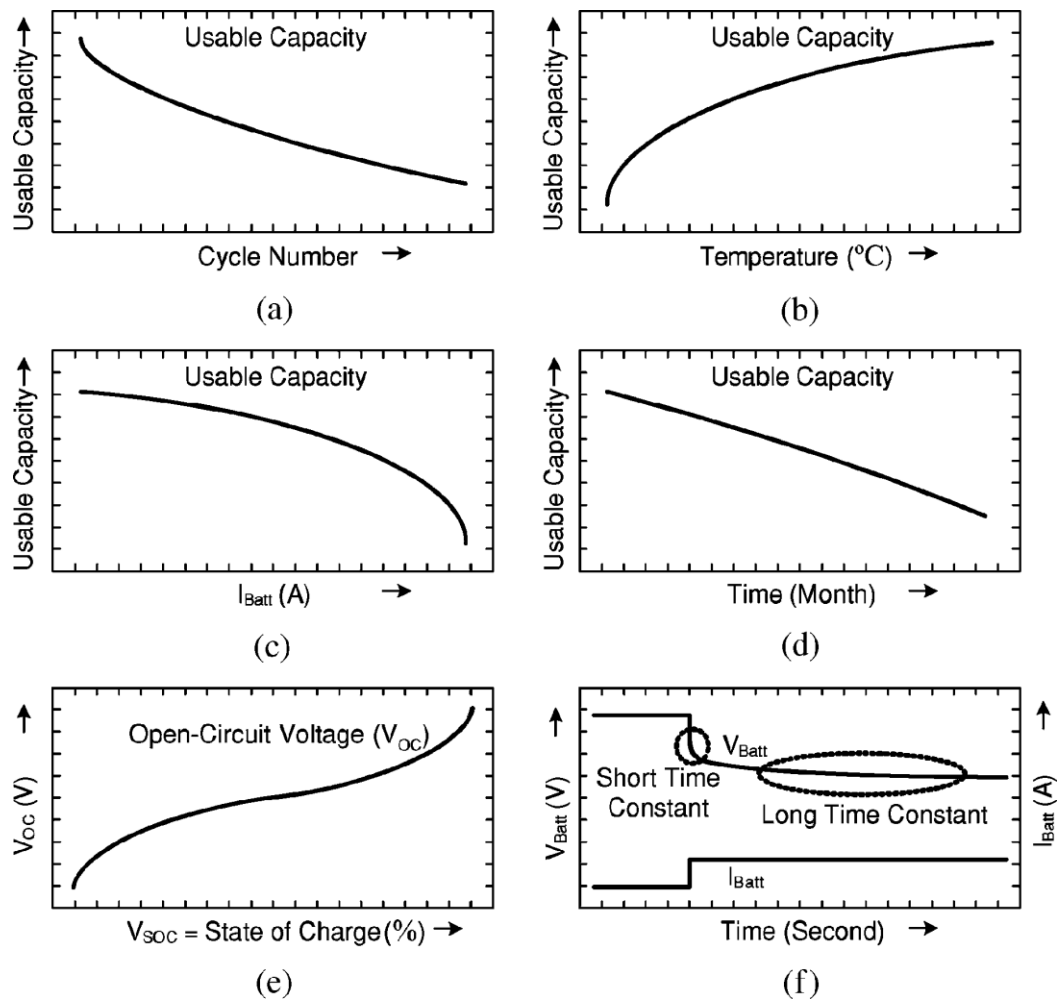

Octavio Salazar

Battery diffusion model

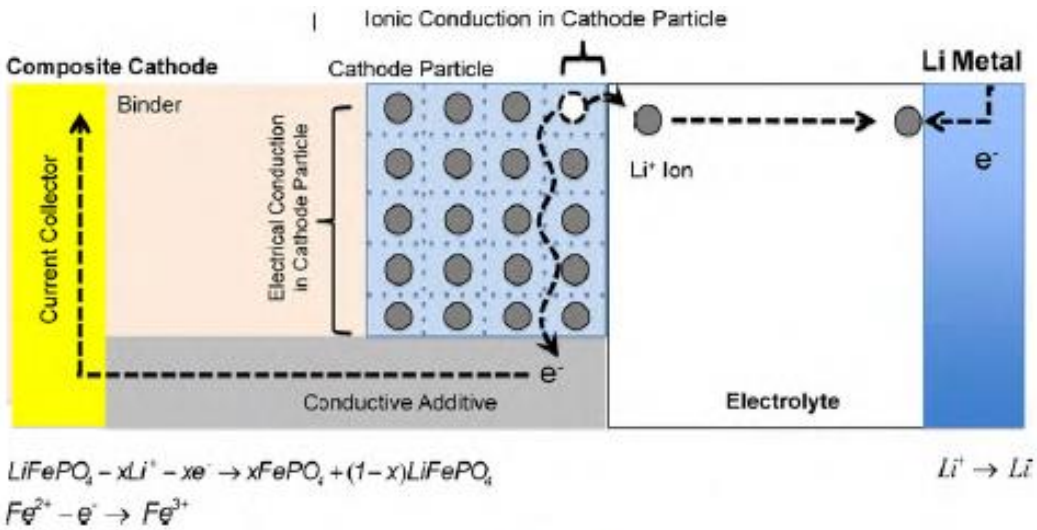

Fig. 3. Conduction phenomena in cathode particle ($LiFePO_4$) during charge.

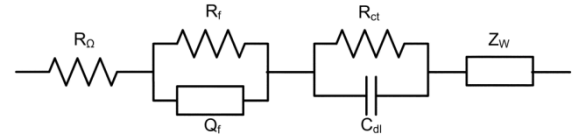

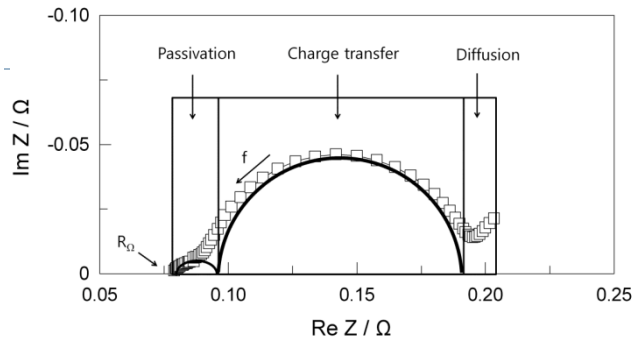

- Total internal resistance
  - electrical
  - ionic
  - interfacial

- Electrical
  - cathode
  - Conductive additives
  - Current collectors
  - Electrical taps
- Ionic
  - Electrode
  - Electrolyte
- Interfacial
  - Electrolyte/electrode
  - Additives/electrode
  - Electrode/current collector

Li-Ion battery electric circuit model

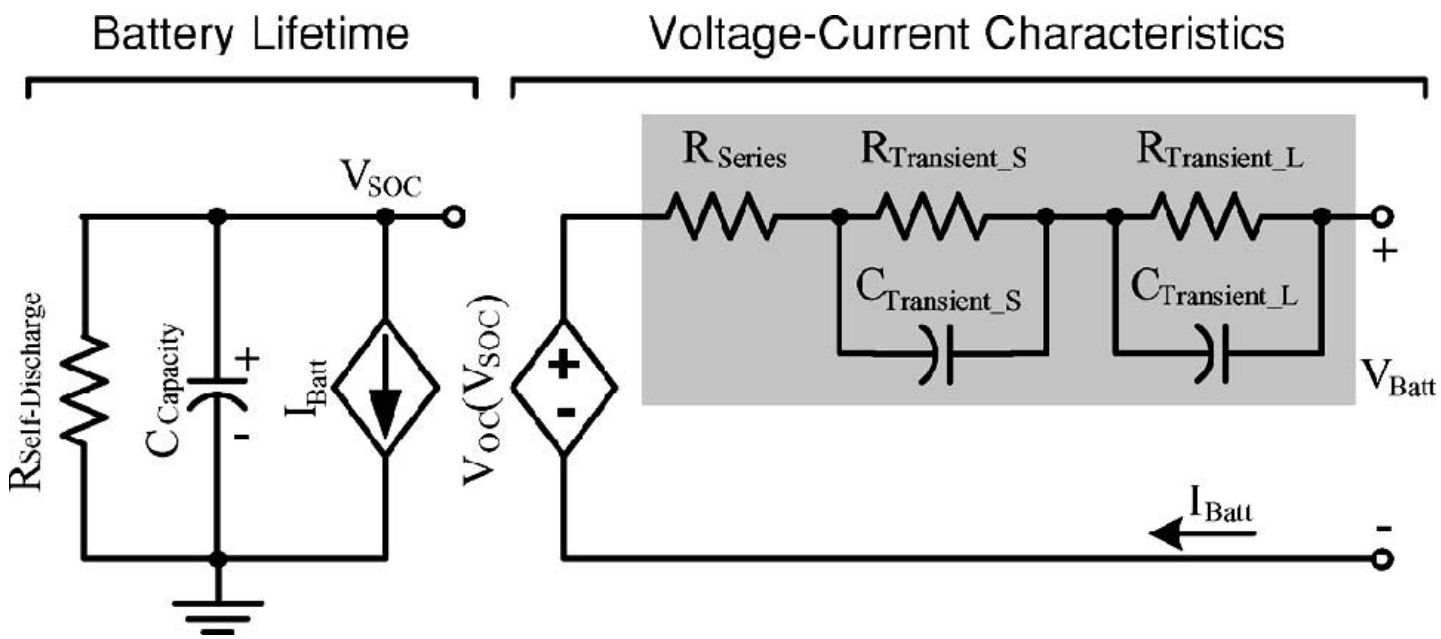

SOC, current capacity and runtime is calculated through a capacitor (*C* Capacity) and a current-controlled current source, from runtimebased models,

The RC network, similar to that in Thevenin-based models, simulates the transient response. To bridge SOC to open-circuit voltage, a voltage-controlled voltage source is used

State of Charge (SOC)- Cell balancing

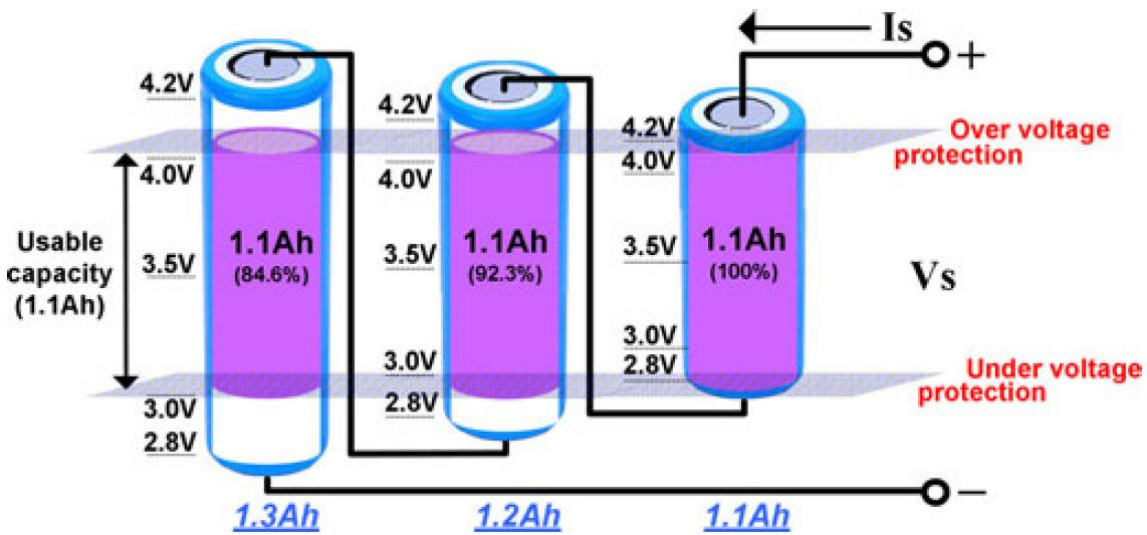

- **Multi-cell battery pack** accentuates the need of SOC estimation and creates cell balancing issues

Consequences of cell unbalance

- Premature cells degradation through exposure to overvoltage
- Safety hazards from overcharged cells
- Early charge termination resulting in reduced capacity
- Cell health detection issues

Causes of Cell unbalancing

- State of Charge (SOC) unbalance
- Total capacity differences
- Impedance differences and gradient

State of Charge (SOC): Cell balancing

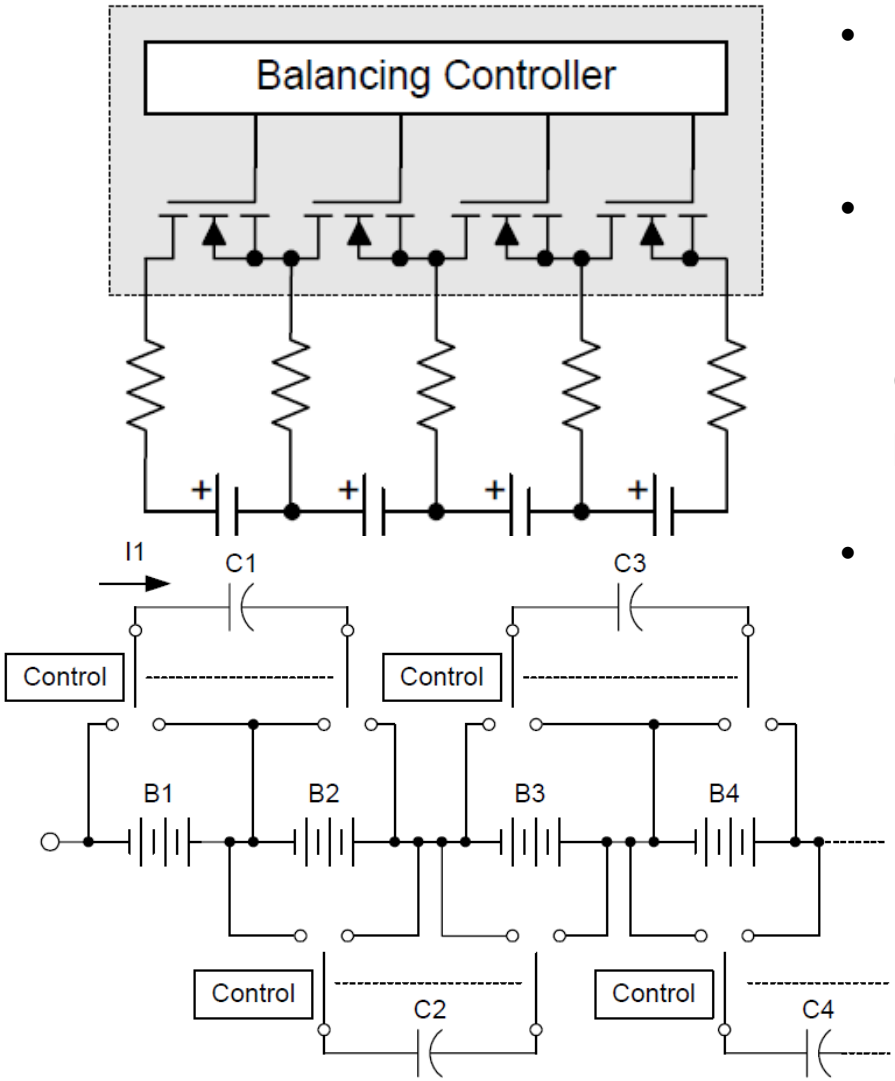

- **Efficient grouping-** Cell matching helps minimize manufacturing variations

- **Dissipative cell balancing** is less efficient due to inherent losses associated with the balancing strategy
  Current bypass: Cell balancing set-up using by-pass FETs.

- **Non-dissipative balancing** minimizes losses but suffers from longer time required for balancing
  Charge redistribution: each capacitor continuously switches between two adjacent cells, so current flows to equalize the voltage of the cells and capacitors
  - C charges to 63% in one time constant to 99% in 4T (time constant T=RC)

Abeywardana, D.B.W.; Manaz, M.A.M.; Mediwaththe, M.G.C.P.; Liyanage, K.M.; , "Improved shared transformer cell balancing of Li-ion batteries," *Industrial and Information Systems (ICIIS), 2012 7th IEEE International Conference on* , vol., no., pp.1-6, 6-9 Aug. 2012

Improved shared transformer cell balancing for Li-ion batteries

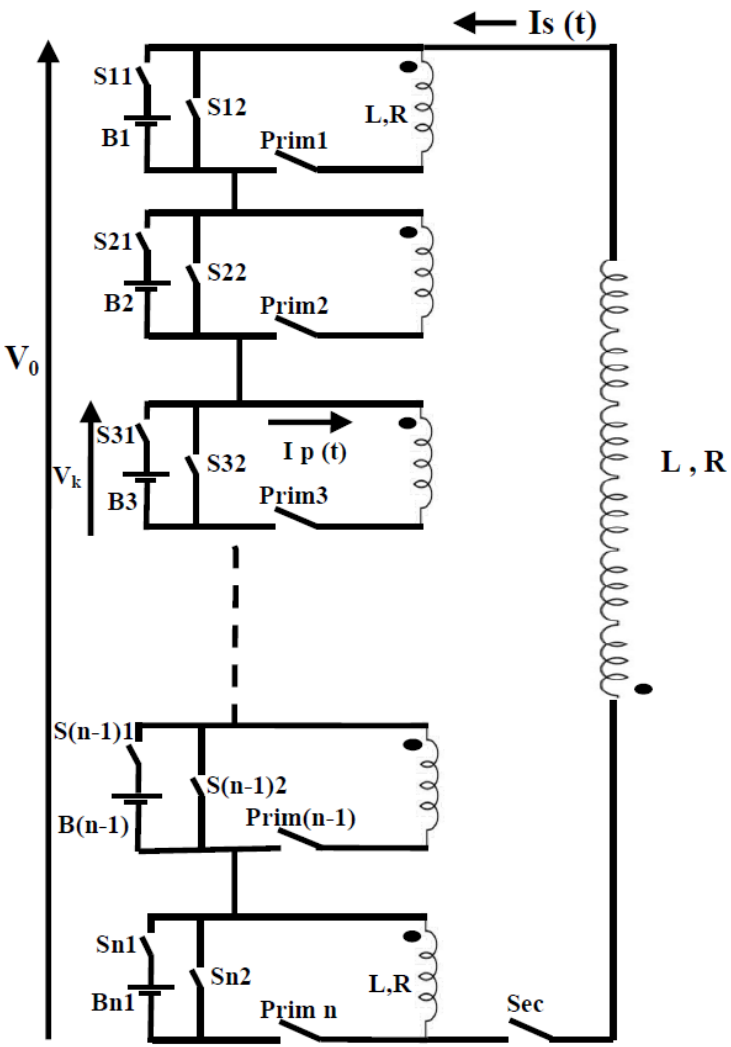

- uses a single magnetic core with primary coils for each cell in the stack.
- The secondary of the transformer is switched to connect with the cell array.
- Can balance a multi-cell pack relatively fast, and with low energy losses
  - inductor reaches 63% max current in one time constant, to 99% in 4T(T=R/L)

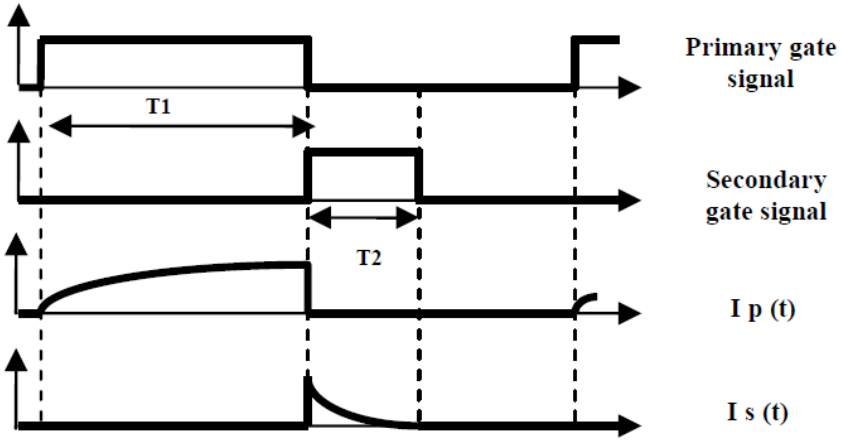

Abeywardana, D.B.W.; Manaz, M.A.M.; Mediwaththe, M.G.C.P.; Liyanage, K.M.; , "Improved shared transformer cell balancing of Li-ion batteries," *Industrial and Information Systems (ICIIS), 2012 7th IEEE International Conference on* , vol., no., pp.1-6, 6-9 Aug. 2012

Research opportunities

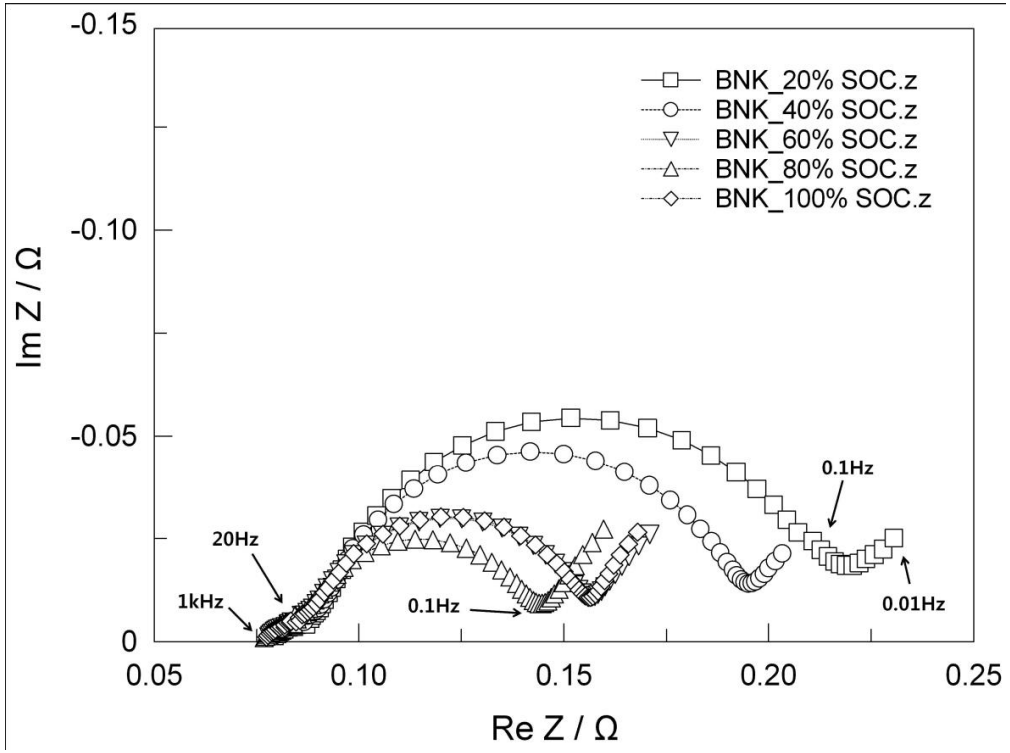

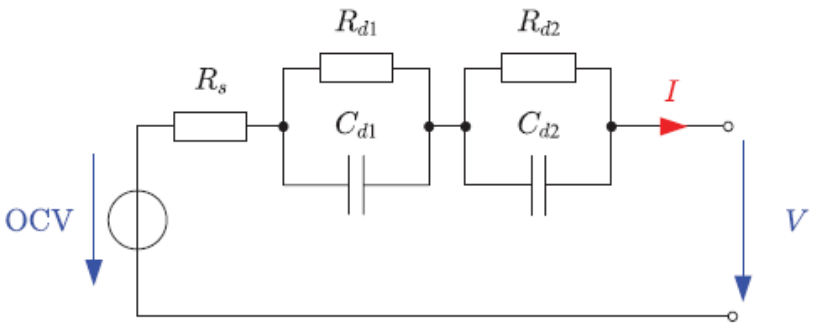

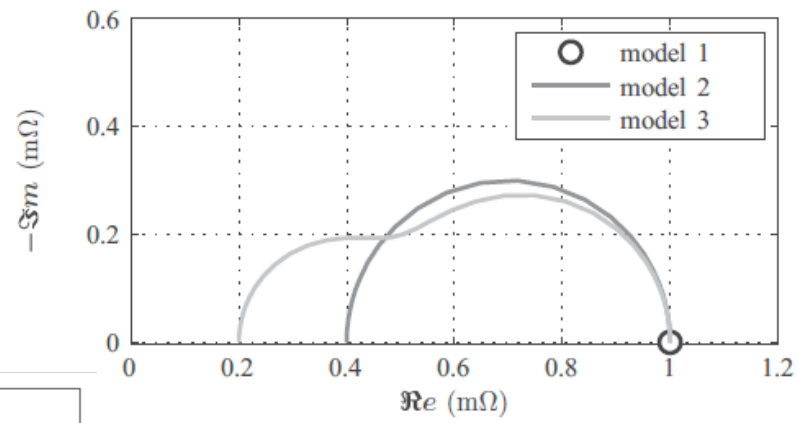

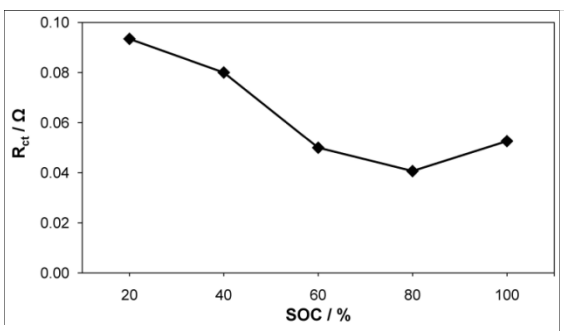

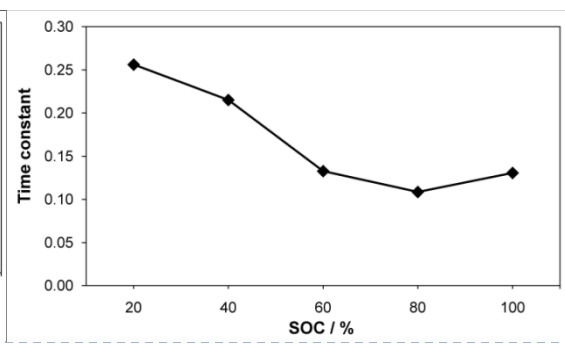

- Adjust the electrical model based on SOC
  - Accuracy improvement needs to be quantified
  - Temperature impact on impedance

Backup slides

(Ref. ARPAe GENI, BEEST, GRIDS programs)

Energy Storage-Current state of Lithium Ion Batteries

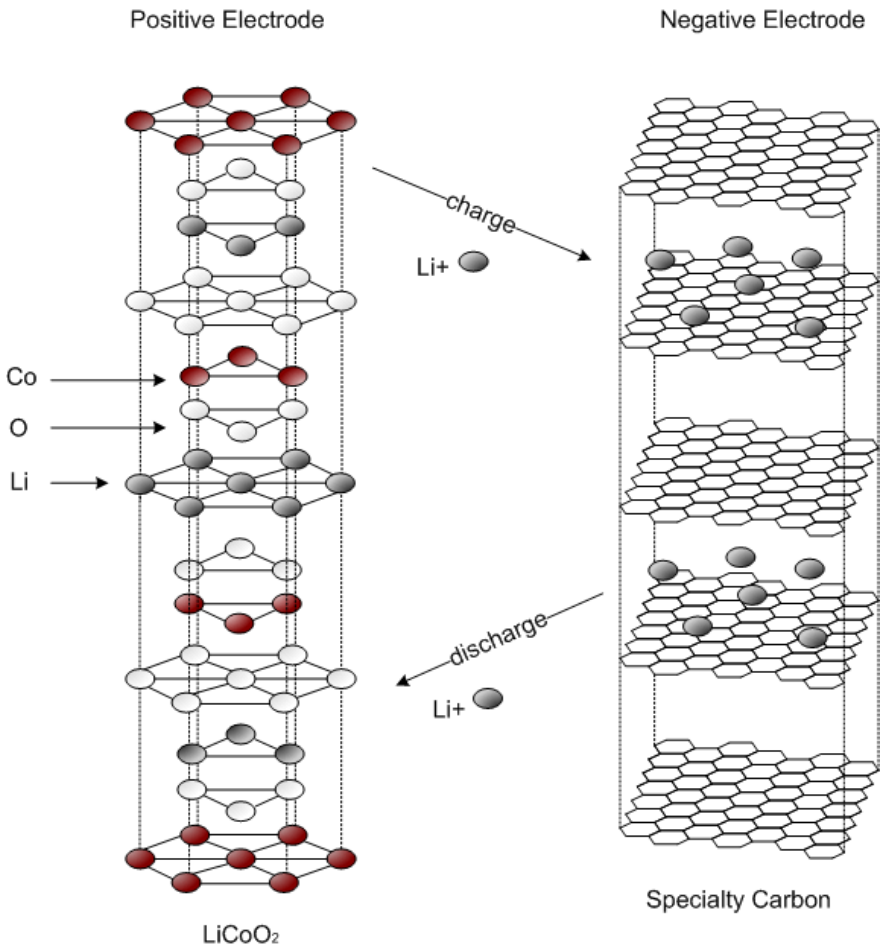

Basic Li-Ion battery lithiation Principle

Current commercial Battery performance
LiCoO2, C680mAh [1]

Lithium Ion batteries take advantage of the structure of graphite to intercalate Li Ions without drastically changing its initial structure

Typical Industry Li-Ion Battery performance
Anode material
•Graphite theoretical capacity: 372mAh/g [1]

Cathode materials [2]
•Layered oxides (LiCoO2)
•Transition metal phosphates(LiFePO4)
•Spinels (LiMn2O4)

•Intercalation process [2]

•80%capacity @ ~600cycles

Positive Electrode $LiCoO_2 \underset{\text{Discharge}}{\overset{\text{Charge}}{\rightleftharpoons}} Li_{1-x}CoO_2 + xLi^+ + xe^-$

Negative Electrode $C + xLi^+ + xe^- \underset{\text{Discharge}}{\overset{\text{Charge}}{\rightleftharpoons}} CLix$

Battery as a Whole $LiCoO_2 + C \underset{\text{Discharge}}{\overset{\text{Charge}}{\rightleftharpoons}} Li_{1-x}CoO_2 + CLix$

State of Charge (SOC)- Coulomb counting

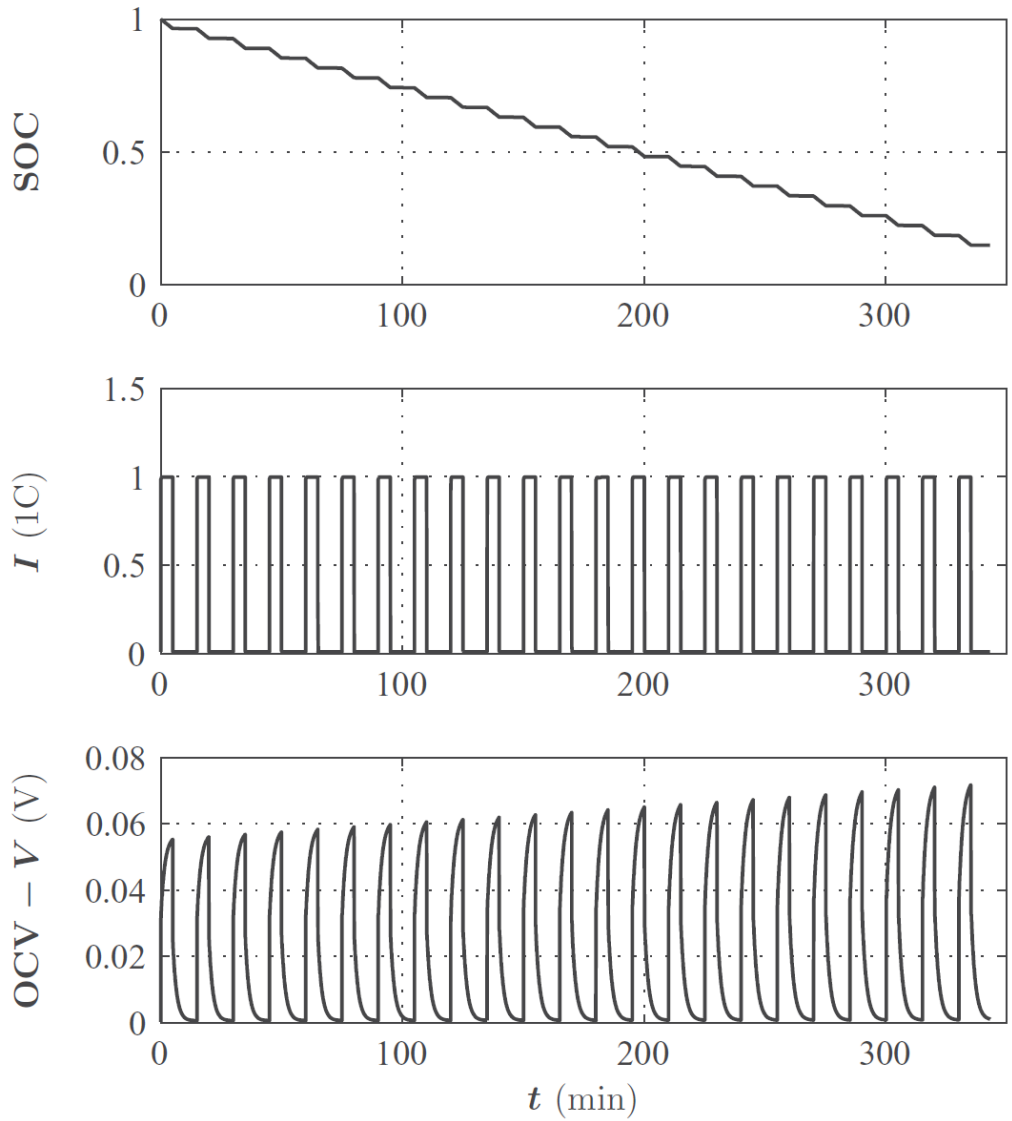

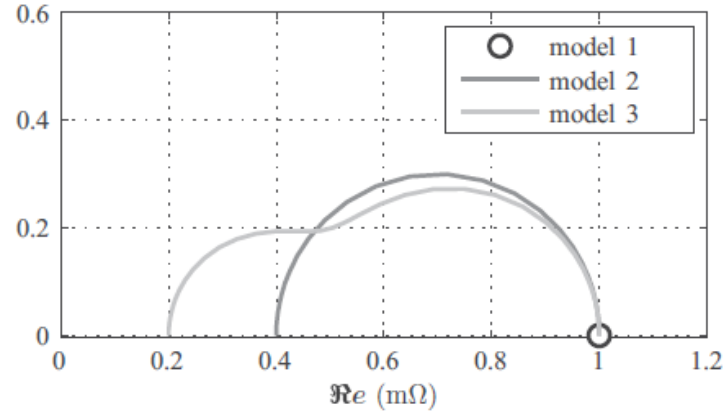

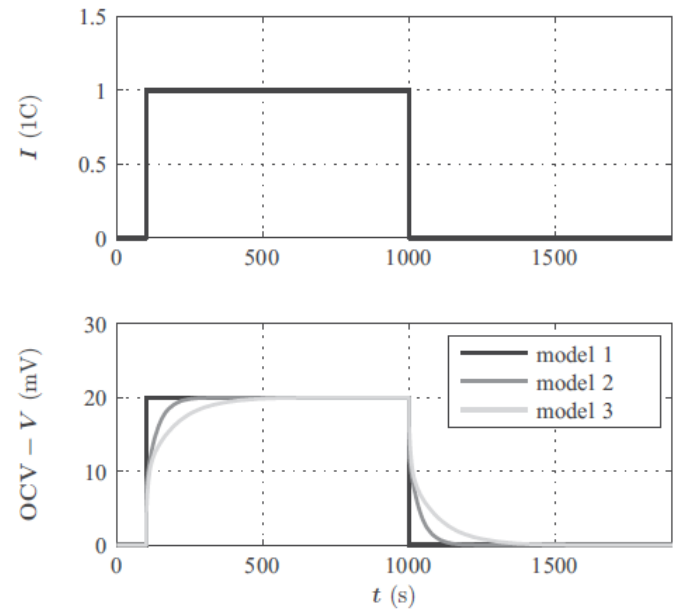

State of Charge (SOC)- Coulomb counting

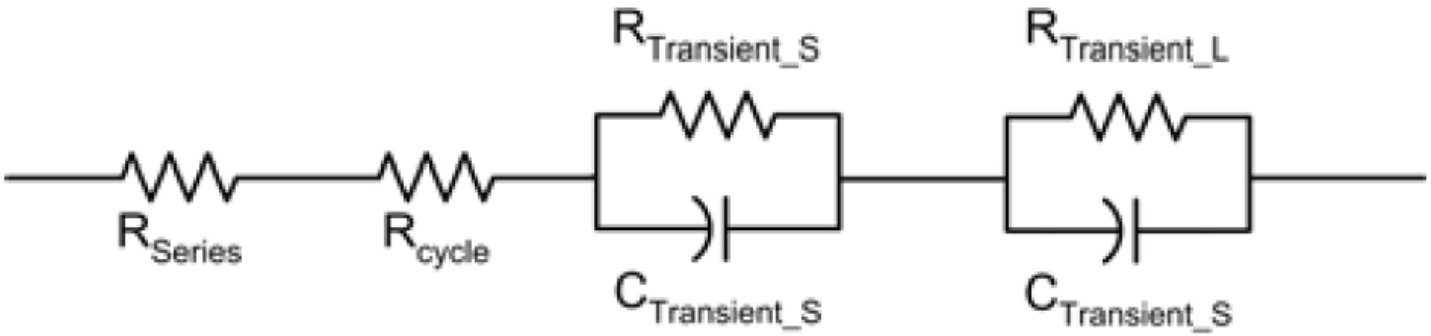

Fig 1. The battery equivalent internal impedance.

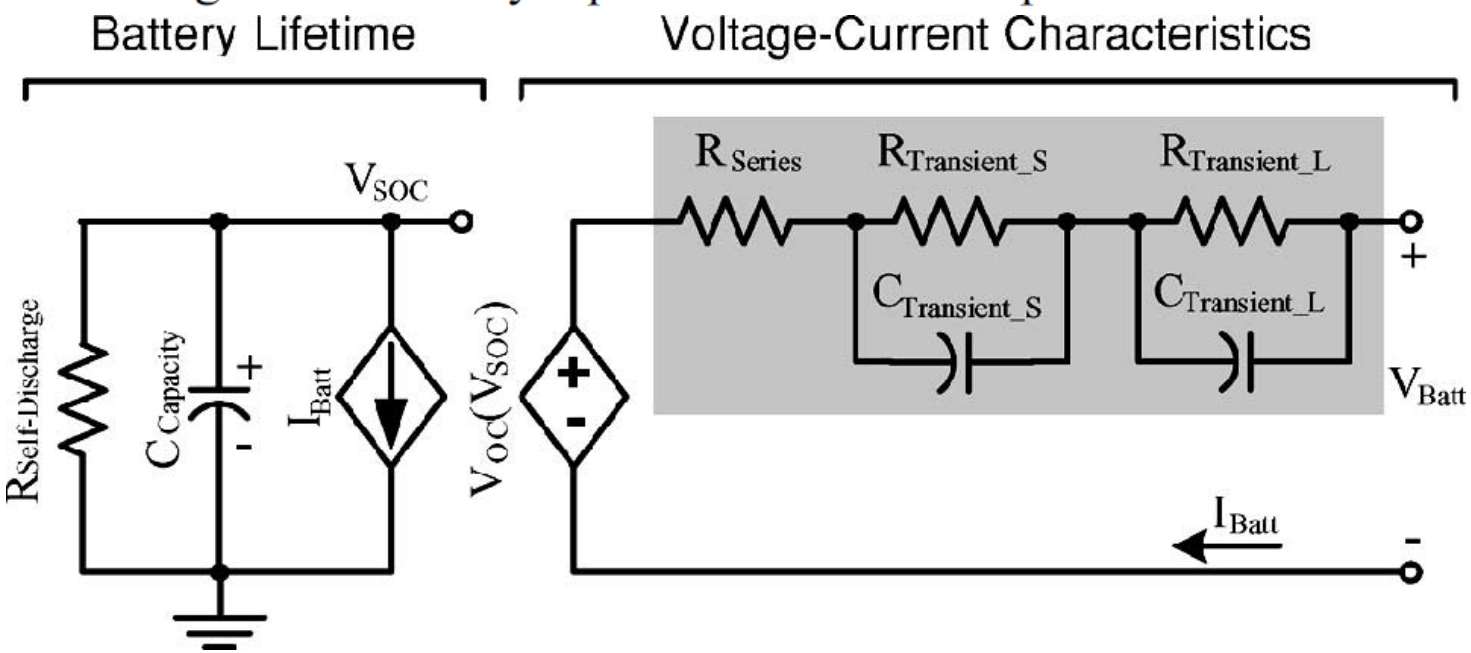

Electrochemical impedance spectroscopy

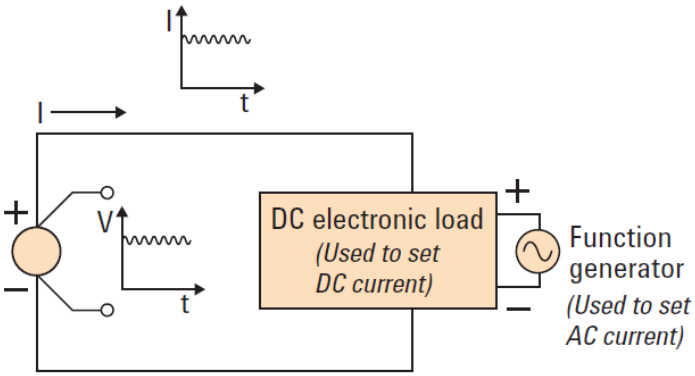

Simplified impedance spectroscopy block diagram

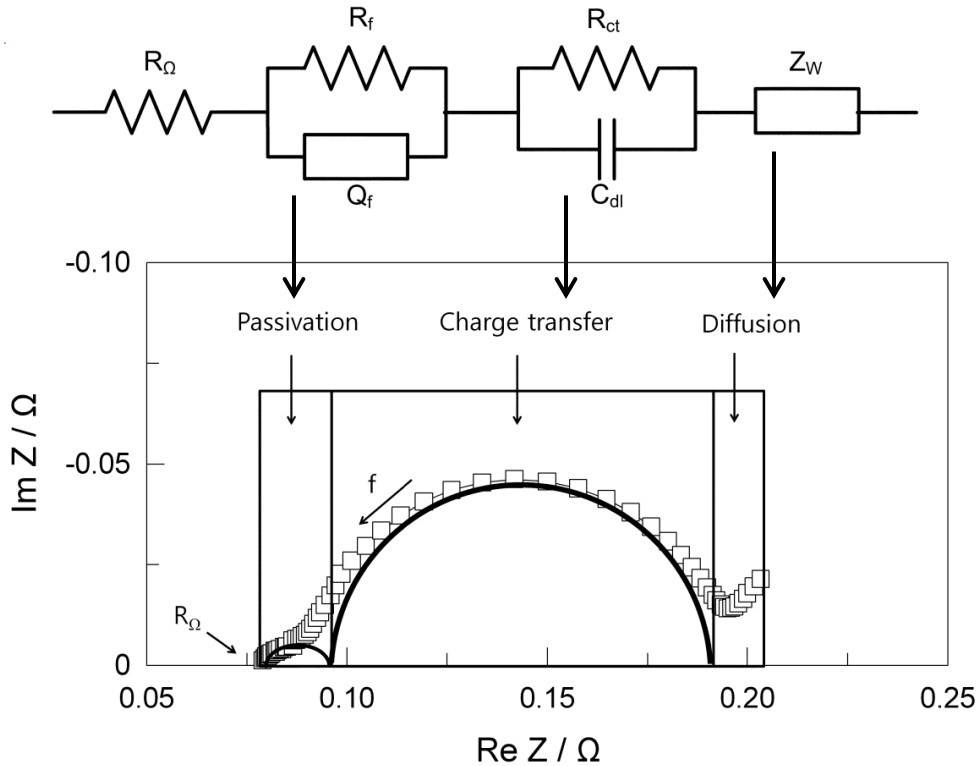

Electrochemical impedance spectroscopy (EIS)

- induces a small perturbation near the target
- measures the AC impedance from the response to the perturbation
- fits the curve using an equivalent impedance model that can physically explain the measured AC impedance, and models the target.

•Impedance spectrum and equivalent circuit of lithium battery

•Representative chemical reactions

- Passivation
- Charge transfer
- Diffusion

J.Lee et al "Novel state of charge estimation method for lithium polymer batteries using electrochemical impedance spectroscopy" Journal of Power Electronics 2011 J

State of Charge (SOC)- estimation using EIS

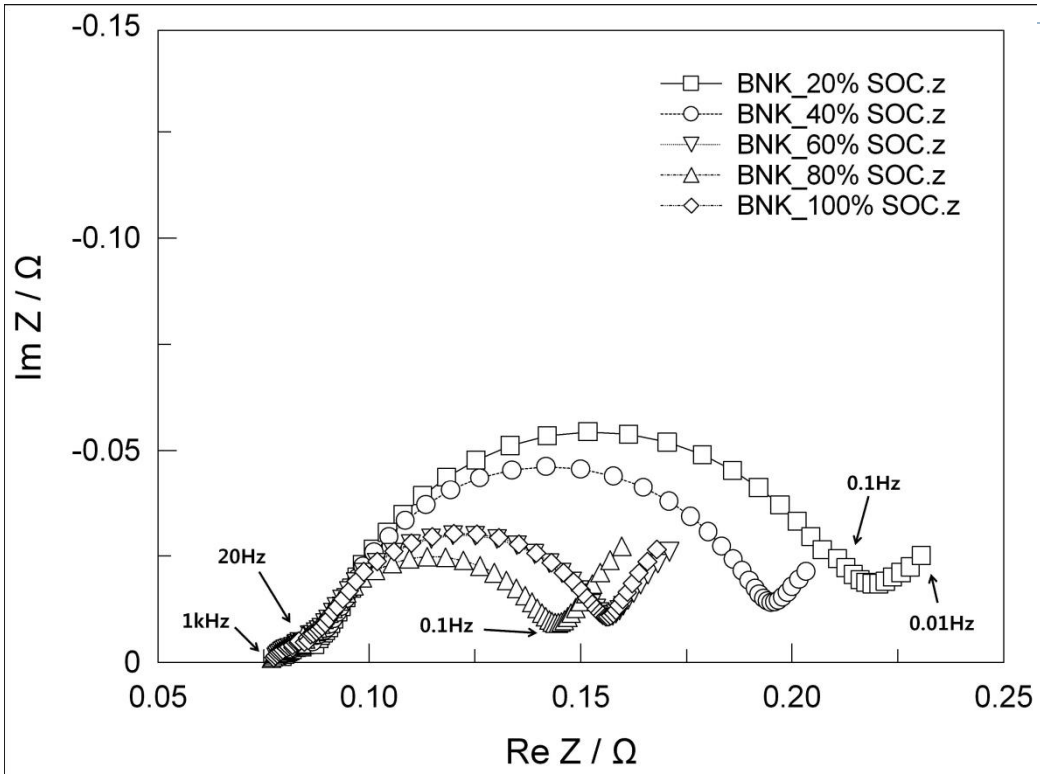

Impedance spectra of the BNK lithium polymer battery at each SOC

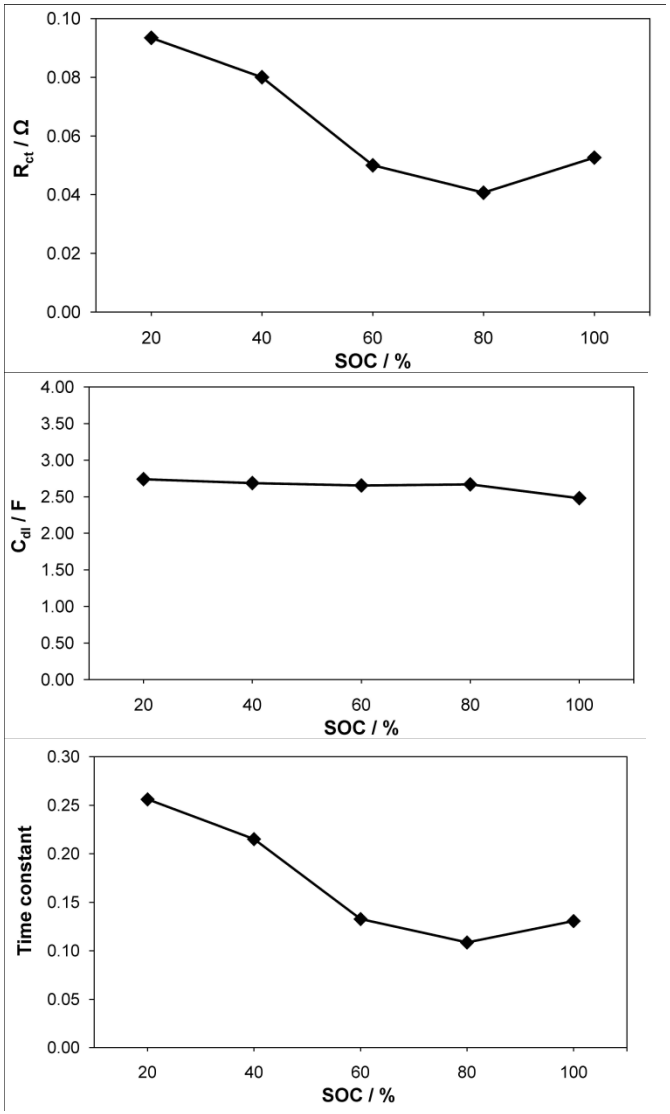

- SOC can be estimated using Rct and Time constant
- Time constant is the product of Rct and Cdl
- Adjust the electrical model based on SOC

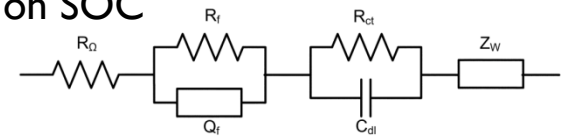

J.Lee et al "Novel state of charge estimation method for lithium polymer batteries using electrochemical impedance spectroscopy" Journal of Power Electronics 2011 J

System power management (architecture)

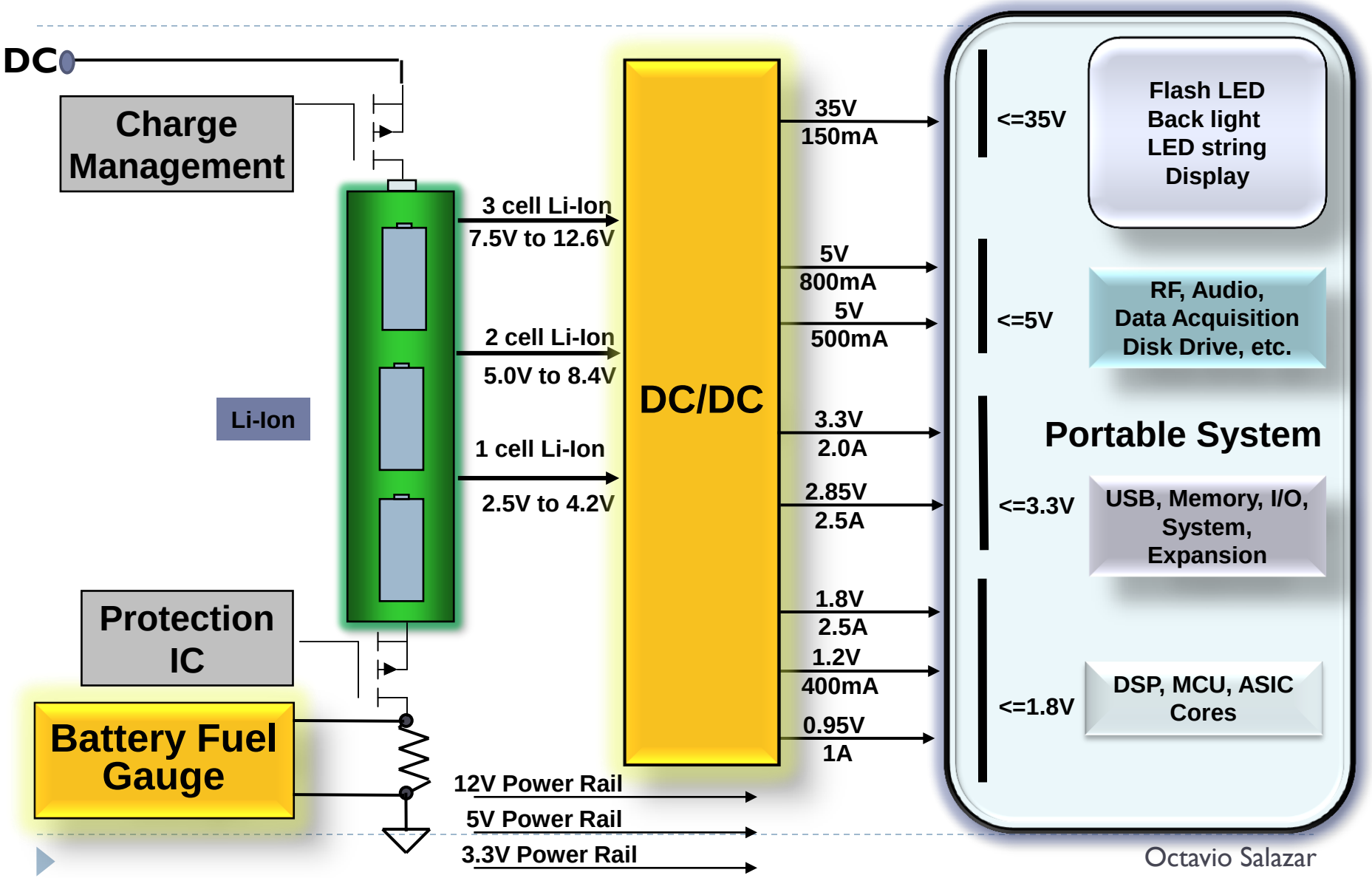

Energy Storage- industry priorities

Cell Chemistries parameters	Portable	Power tools	Transportation	Medical	Grid
Cost	High	High	High	Low	**Highest**
Energy Density (Wh/L)	**Highest**	High	High	high	high
Energy Density (Wh/Kg)	High	High	**Highest**	high	Medium
Cycle Life (80% capacity)	>600	Medium	**Highest**	high	high
Self-Discharge Rate (Month)	Medium	Medium	Medium	**Highest**	High
High Temperature Performance (55+/-2)	Medium	Medium	High	Low	High
Low Temperature Performance (-20+/-2)	Medium	Medium	High	Low	High
High-rate Discharge/Power (10C)	**Medium (4G-H)**	**Highest**	**Highest**	Low	
Safety & Environmental Concern	High	High	**Highest**	**Highest**	**Highest**

(Ref. ARPAe GENI, BEEST, GRIDS programs)

Cathode material- Lithium Ion Batteries

Cell Chemistries	$LiCoO_2$	$LiFePO_4$	$LiMn_2O_4$	
Rate Voltage	3.7V	3.2V	3.8V	
Charging Voltage	4.2V	3.7V	4.2V	
Discharging end Voltage	3.0V	2.0V	2.5V	
Energy Density (Wh/L)	447	222	253	
Energy Density (Wh/Kg)	140-145	90-110	105-115	
Cycle Life	>700	>1800	>500	
Self-Discharge Rate (Month)	1%	0.05%	5%	
High Temperature Performance (55+/-2)	Good	Excellent	Acceptable	
Low Temperature Performance (-20+/-2)	Good	Good	Good	
High-rate Discharge (10C)	Good	Acceptable	Best	
Safety & Environmental Concern	Poor	Excellent	Good	

Power conversion- regulation topologies

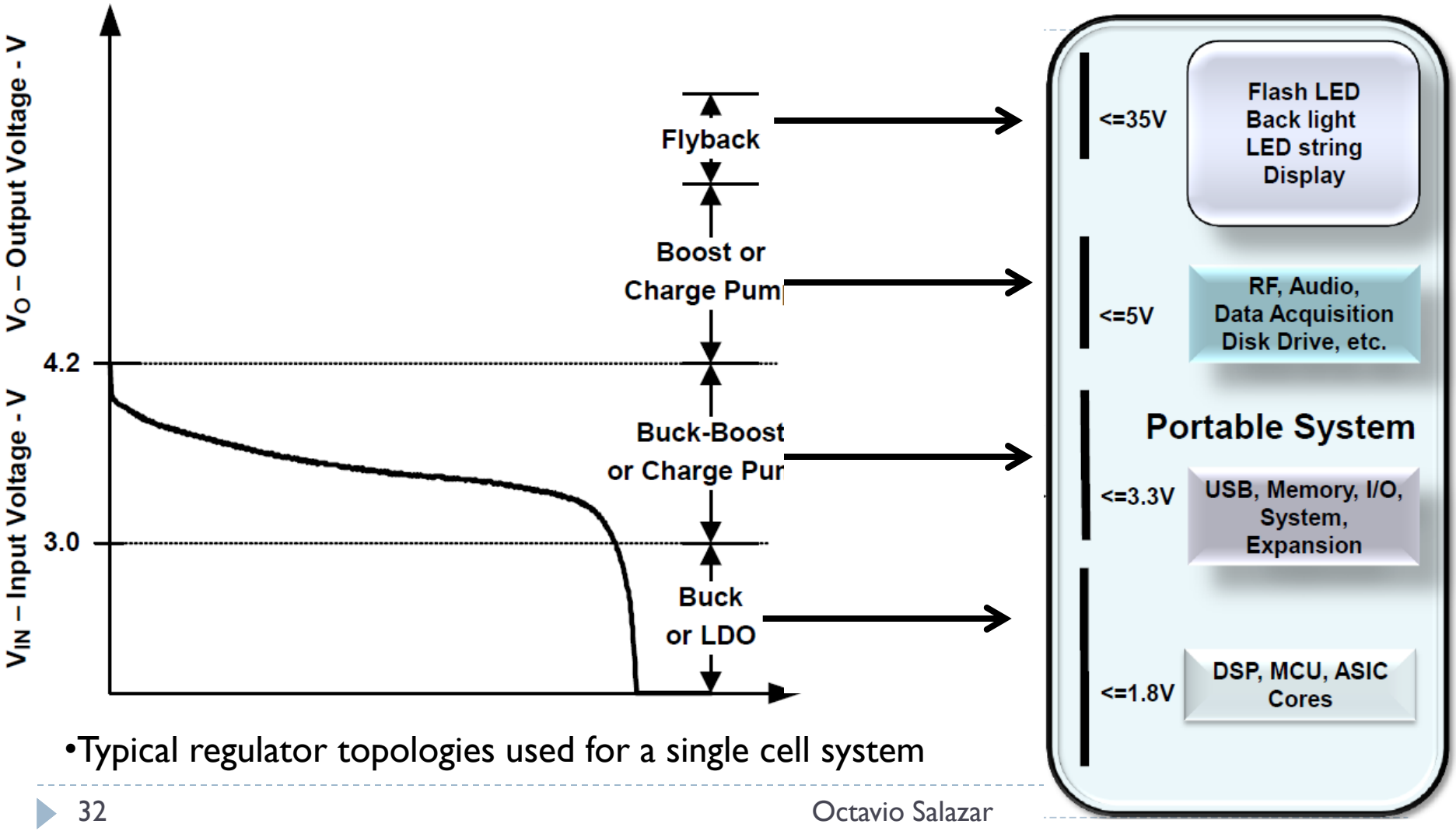

- Typical regulator topologies used for a single cell system

Crystal structure – back up slide

Three Major Cathode Materials for Li Battery

Olivine

- **Single channel diffusion**
- **Higher cycle life**
- **Lower discharge rate**

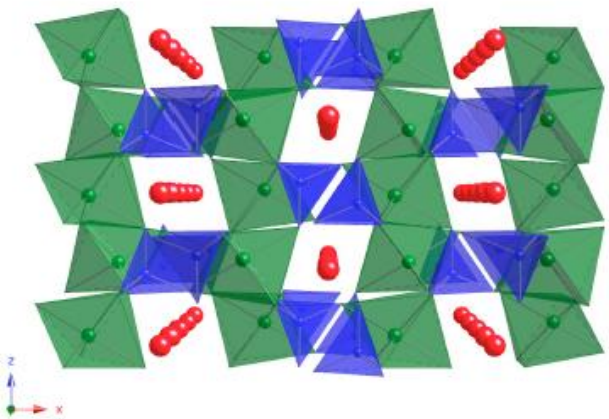

Layered

- **2d diffusion**
- **Current used material**

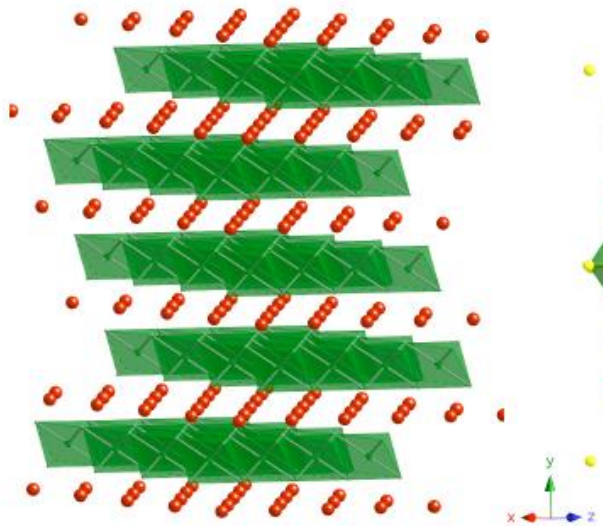

Spinel

- **3D diffusion**
- **Higher discharge rate**
- **Lower capacity**

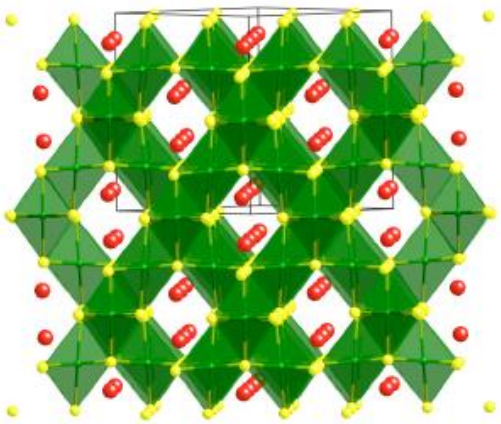

$LiCoO_2$: ≈ 160 mAh/g

$LiFePO_4$: ≈ 160 mAh/g

$LiMn_2O_4$: ≈ 100 mAh/g

State of Charge (SOC)- Coulomb counting

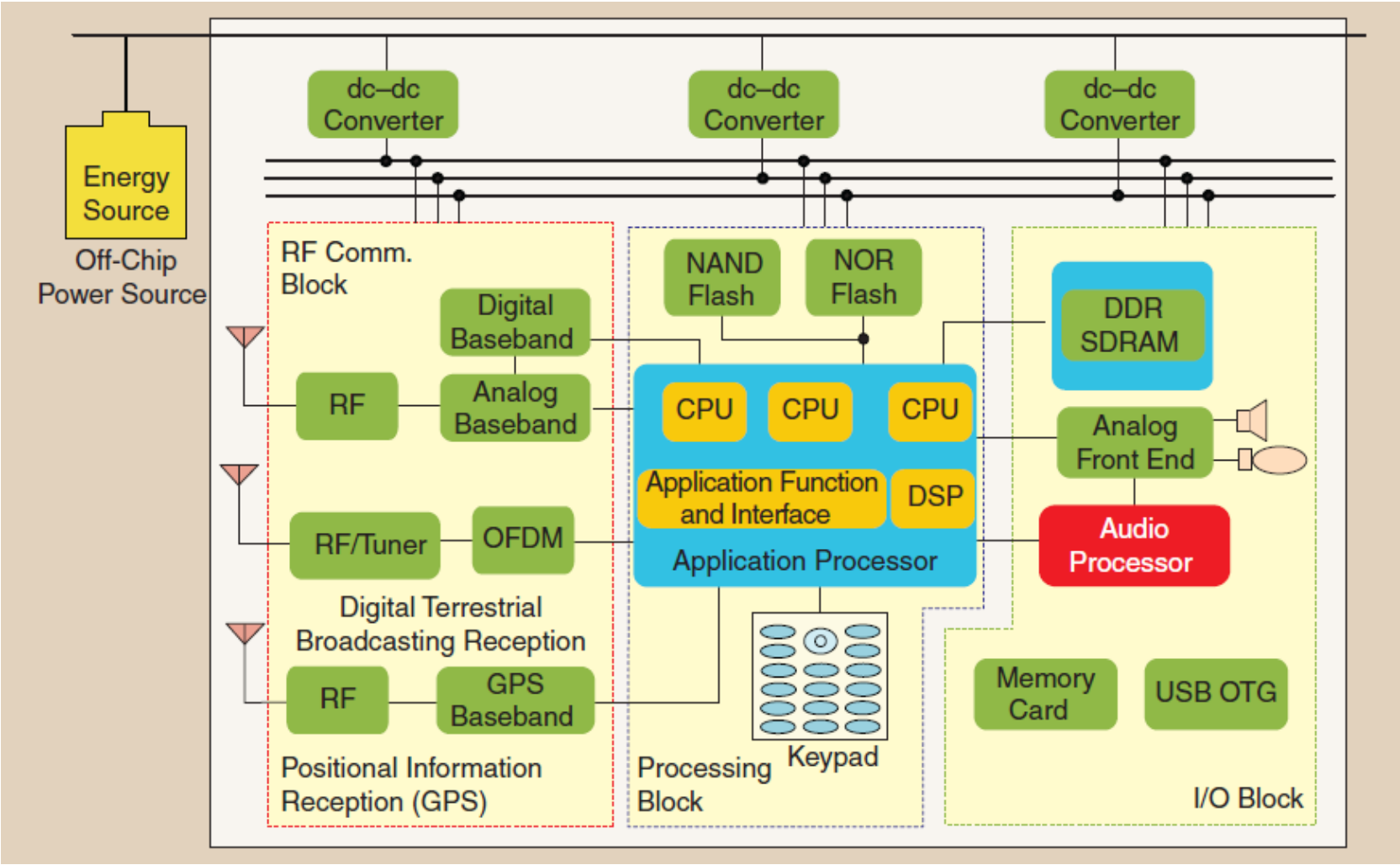

System power management (architecture)

$$Po = Pi * eff$$

$$P = IV$$

$$I = \frac{P}{V}$$

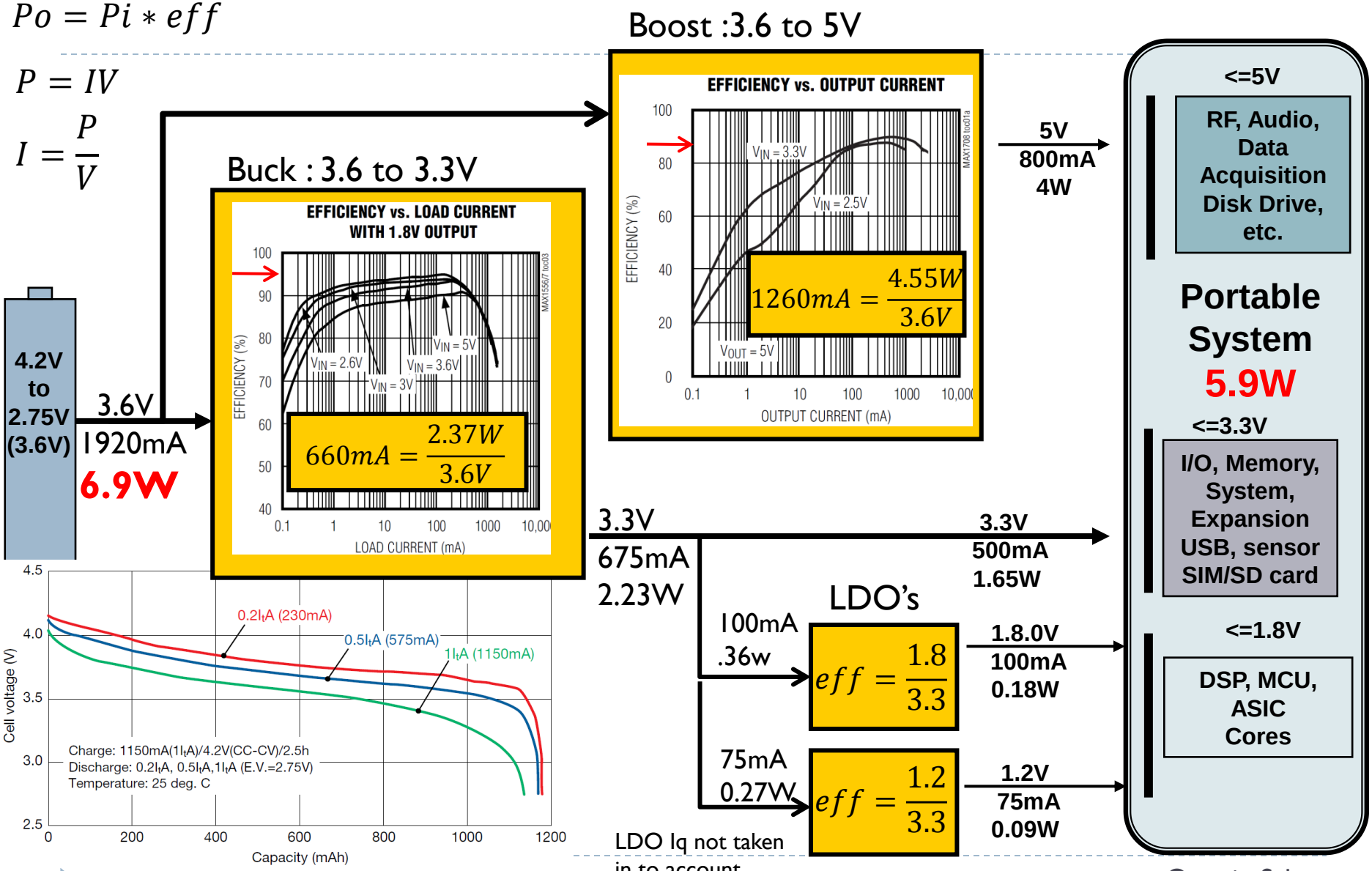

Octavio Salazar

System power management (architecture)

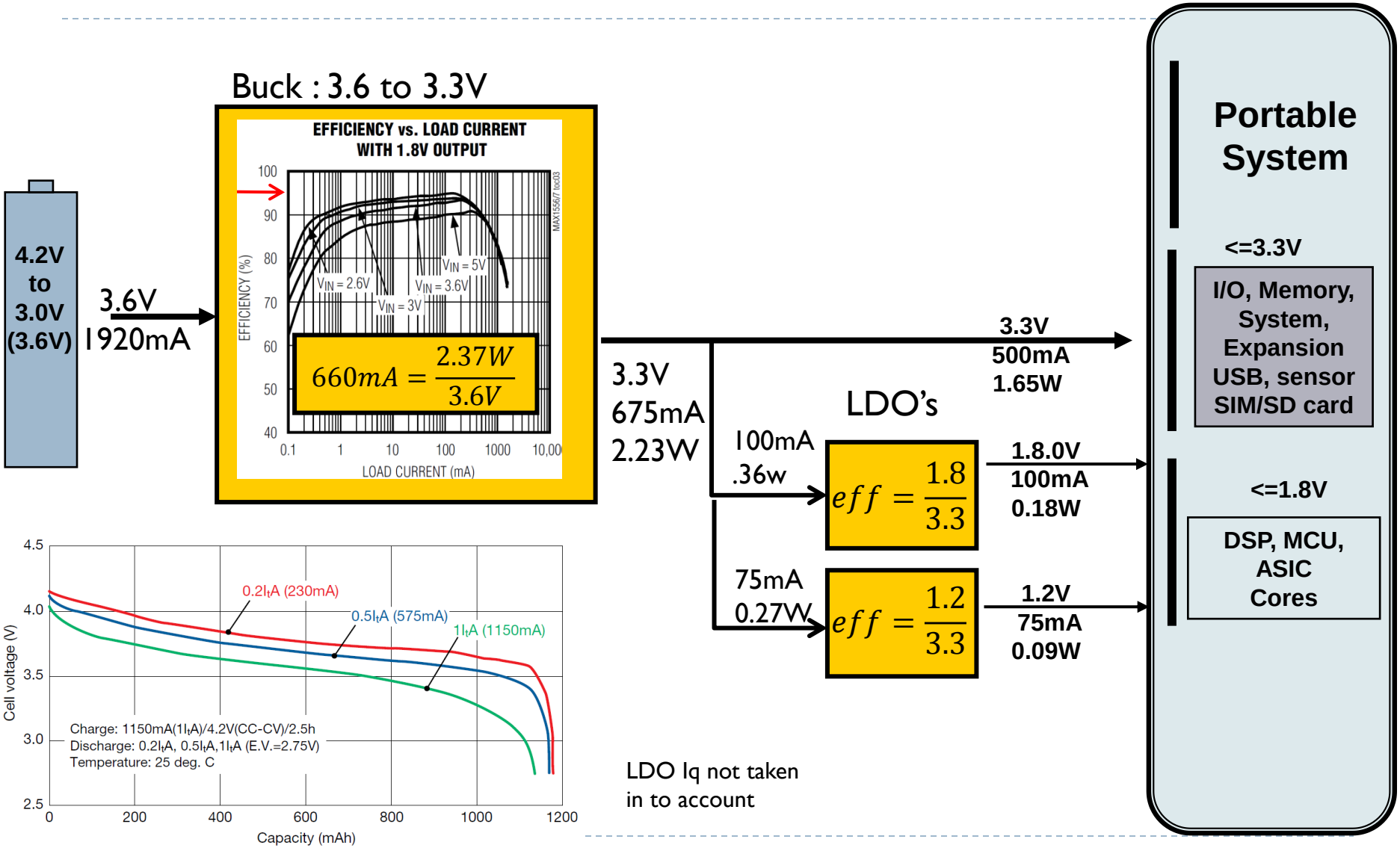

Back up slides: Battery basics- lithium-ion batteries

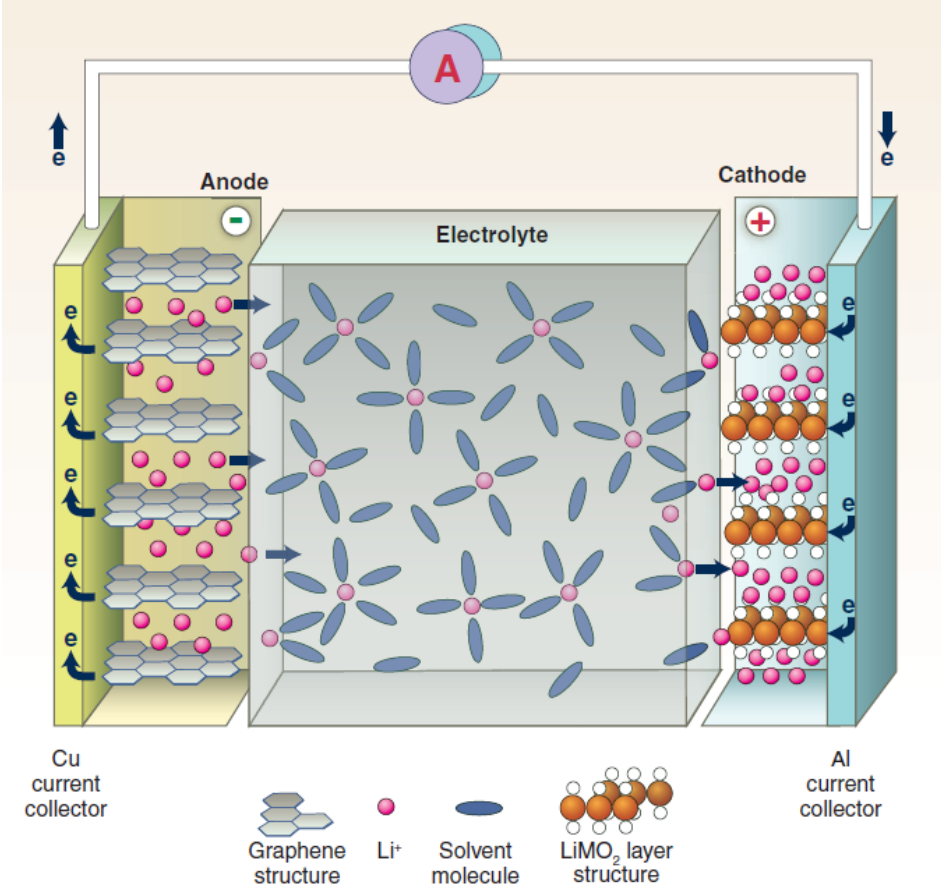

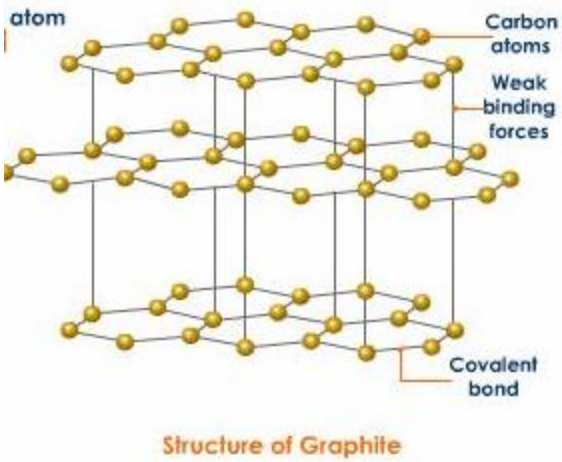

Intercalation process

Lithium Ion batteries take advantage of the structure of graphite to intercalate Li Ions without drastically changing its initial structure

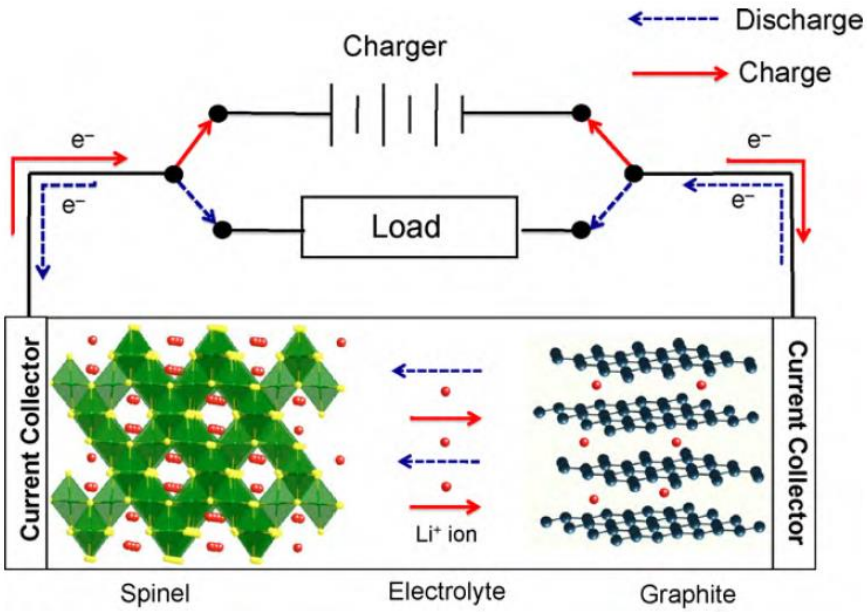

Basic Li-Ion battery lithiation Principle

Current commercial Battery performance LiCoO2, C680mAh [1]

State of Charge (SOC)- Coulomb counting