Wireless Optical Communication System

http://ieng9.ucsd.edu/~hdao/cse237a/finalreport

Thomas Weng and Darren Dao

I. Project Goals

The goal of our project is to develop a low powered, inexpensive, and versatile optical wireless communication system. Such a system should be able to send transmission messages using lasers, and should be low powered, especially compared to radio frequency based wireless communications. Our goal is to create and design a versatile system so that the system can be used for different types of wireless networks, including IP based networks and wireless sensor networks.

Our primary objective is to develop a working system that can achieve wireless communication over laser. This entails the design and development of the hardware, data link, and physical layers of the system. This includes the data network protocols, including the method of using the laser to transmit information over air. We also need to design the higher level network protocols, such that data frames can be transferred over the data link layers.

A secondary goal will be to compare and contrast the power consumption of the optical wireless communication system against a typical RF wireless communication system. We seek to demonstrate that for some wireless applications, an optical wireless system holds certain advantages in terms of power and other characteristics. It is our goal as well to develop a framework for further research and analysis into such a system, and making one actually viable.

Overall we seek to develop a working communication system where two nodes can transfer data (in the form of bytes) to each other using laser pulses, and demonstrate that such a system can indeed work. In this paper, we will explain the motivation for such a system, where a laser based network has advantages over traditional RF ones, and how we implemented our prototype network.

II. Project Background

Wireless communications has become increasingly important in technology, communication, and computer science. From cell phones to wireless internet to home devices, everything is being converted from wired into wireless. A major research and focus area in fact has been the wireless sensor network. This network relies on low powered self-contained nodes that sense the environment, such as temperature or humidity [14]. These nodes must be able to transfer and receive information wirelessly.

Indeed, a lot of research and funding has been put into developing wireless systems. Most of the focus has gone to radio frequency wireless communication. One area however that

has not seen much focus is an optical wireless based system, specifically using lasers. There has been some research done in this area, and there is at least one vendor that sells a large laser based data transmitter for use in local area networks over IP [15]. But overall the field is limited, and there isn't any production unit for a small laser engine that can be used in smaller networks with more stringent power requirements, like a wireless sensor network or other mesh network.

The motivations and benefits of a laser based wireless network over a traditional radio frequency network are several. Most important is that for infrequently communicating nodes, lasers require much less power. This is because they do not need to actively listen as is the case with RF [18]. This can mean substantial power savings for devices that very rarely receive any messages. These nodes then are free to stay in sleep mode when not sensing, rather than having to power on the radio unit. As radio communications tends to be the biggest source of power consumption in many systems, this can be significant.

Another is that the range of a high powered laser is up to a few kilometers [11], and the beam focus is relatively narrow. This means that it would be possible to very directly send a message to another device a few kilometers away, without interfering with other devices. In a RF wireless network, a transmission causes traffic and nodes listening to that channel will pick it up [17]. But a laser based wireless network will not have that issue, since the only possibility for interference will be nodes that lie on the laser beam path.

Challenges include coming up with a reliable laser coding scheme and optimizing for latency and bandwidth. These are challenges inherent in any wireless communication system. Limits to this are of course obvious - a laser based communication system will have extreme LOS limitations, in that if the laser and detector cannot see each other, then they cannot communicate. As such, a laser based communication network will be inappropriate in many applications. Another limitation is that these nodes must be fixed. If a node moves, then other nodes will no longer point to that node's current position. Likewise, that node will no longer be correctly pointing to other nodes with its laser. Therefore, wireless applications that entail movement of nodes would not be appropriate for an optical wireless system.

III. Project Description

Because we are trying to develop what essentially is a network, it is useful to compare our project against the OSI network stack. Our design has two hardware components, a small testboard with a MSP430 attached to a laser and laser detector, and the Intel XScale platform. The testboard essentially contains the data link and physical layer of the OSI network stack. The XScale platform will be handling the upper layers of the OSI networking stack. The two units are connected via a serial connection, specifically RS-232. The overview of the design can be seen in Figure 1.

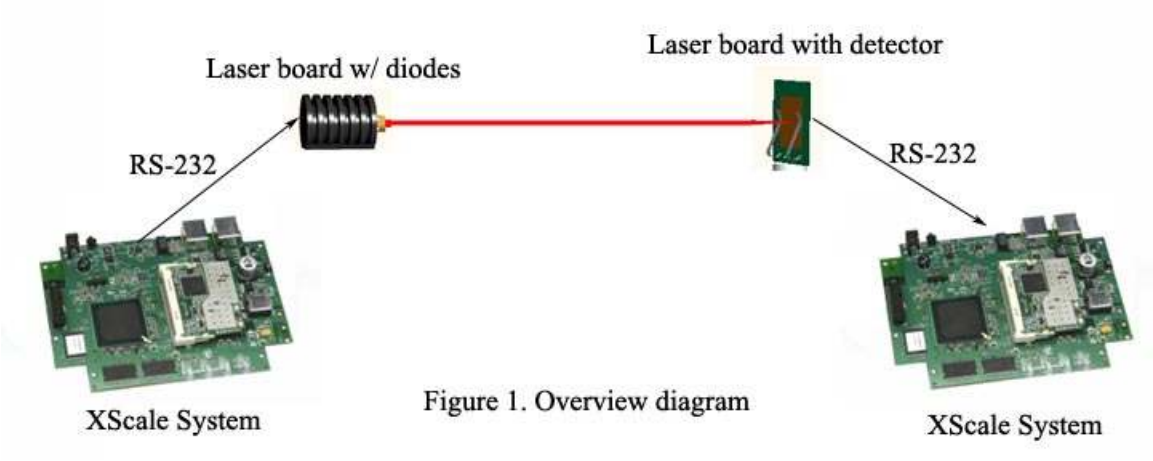

Figure 1. Overview diagram

The way this works is that the XScale will read in a line of text or a file, and break it down into bytes. At this layer, the XScale must frame the bytes, and add error detection codes as well. Because of the versatility, combined with the high processing power of the XScale, many different types of networks can be run on top of our laser wireless system. For example, the XScale can process IP data, and convert that appropriately into a byte pattern to send over the laser board. On the receiver side, the XScale will receive the bytes from the laser board and convert that back into the original message.

The laser board, which encompasses our data link and physical layers, will do the actual transmission of bytes over the air. It will receive bytes from the XScale, and encode that onto a laser beam. The laser board is essentially a byte pipe for the XScale. The laser board will then code the byte into a series of laser pulses, and pulses the laser diode accordingly. The receiver unit will detect these laser pulses, and based on the timing pattern of the laser pulse, will decode what the byte originally was. It will then send the raw byte to the XScale platform via RS-232. From there, the XScale program will determine what to do with the data, based on the framing that was received.

IV. Implementation

The actual implementation involves two systems - the laser board system and the Intel XScale platform. These two systems are connected via a serial cable utilizing RS-232. Data to be transmitted out will be sent from the XScale to the laser board, and data that has been received will be sent from the laser board to the XScale.

Our specific implementation of our laser system makes use of a test board with a TI MSP430 microcontroller. The MSP430 is a very low powered microcontroller [7], and thus was ideal for our system. In addition, the test board had test points that connected directly with the port and pins on the MSP430, which we were able to use to solder the laser diode as well as the laser detection unit. The MSP430 has an UART, which we attach to a RS232 level converter [8], so that we can use communicate with the Intel XScale via the serial cable. Through this the XScale can send data bytes to transmit, and receive data bytes from the laser board.

The laser diode we selected is connected to the test board via test points. In reality, the test board has additional drivers for such an application [10]. When we want to pulse the laser diode to send out a laser beam, we set the voltage to high going into the laser diode from the microcontroller. This will pulse the laser driver to send the appropriate voltage to the laser diode, which will cause the laser diode to shoot out a laser pulse.

Likewise, our laser detector consisted of a separate module that was wired to other test points on our board. Our laser detector actually was a pre-made unit consisting of laser sensor diodes, connected to an amplifier circuit. The end result is that whenever our laser detector module receives a laser pulse, it will send a voltage high to the MSP430, alerting that a laser pulse has been detected.

The basic algorithm works by encoding the incoming byte into a timing pattern. Every byte that gets transmitted essentially is represented by a specific timing pattern. For a given byte, we have 11 time slots. Each time slot can contain a laser pulse, or can contain nothing. For example, if we wish to send out byte 0x01, then we would break down the timing pattern and only fire the laser on the last time slot. Other bytes have different patterns. We start off every byte with a 101 sequence (that is, time slot 0 has a laser pulse, time slot 1 has no pulse, and time slot 2 has a pulse).

The receiver laser board will receive then a series of pulses. As it gets a pulse, the microcontroller will record the precise time of when that pulse occurred. After the 11 pulses happen, it will recreate the timeslot sequence by calculating the time differential between each pulse. In our case, the time slots are 100 microseconds wide, and thus after receiving the 101 sequence, the receiver will calculate whether or not a time slot had a laser pulse by basing it off how far apart the laser pulses are.

Once the receiver laser board determines the byte that was transmitted, it goes ahead and transmits that through the serial line up to the XScale platform. Thus, our laser board data link layer fully handles the transmission of bytes across the air using lasers.

Our XScale implementation then handles the higher layers. As mentioned before, the XScale communicates with the laser board via RS-232 [10]. More specifically, the program on the XScale will open up the COM1 port using /dev/ttyS0, which returns a file descriptor that can be used for doing I/O.

On the sender's side, the XScale is responsible for breaking input into bytes and frame them before sending to the laser board. It frames the bytes by surrounding them with a header and footer. The header will contain a special sequence of bytes "zzz", followed by the mode of operation (1 = sending data from a file, 2 = sending data from command line, 3 = sending a command execution request from the command line). As for the footer, it is composed of the special sequence of bytes "zzz".

On the receiving side, the XScale is responsible for reading bytes from the laser detector. It will look for the header to determine what to do with the input. Once it receives the

header, it will keep on reading and display the received data until the footer is received. At this point, it will go back to the beginning state, and listen for new frames of data.

V. Analysis

We now compare the power consumption between our wireless laser network and a standard wireless RF network. For comparison sake, we will use a Zigbee RF network, as the Zigbee is very low powered and is used in wireless sensor networks.

For applications that do not need to send data often, a laser network has huge advantages in power consumption. This is because the receiver does not have to actively listen to anything and thus can go to low powered sleep and idle mode. In contrast, a Zigbee node must actively listen and consume power, even when no data is being sent. Depending on the duty cycle, a typical RF enabled node will consume anywhere from 1 to 10 mA to listen for incoming messages [13].

The other advantage of a laser based system is in the range. A laser has maximum ranges in the kilometers [11], which far exceeds Zigbee and most traditional RF based networks, which typically have theoretical ranges of less than 100 meters [12]. This means that it would be possible to have a node that is very far from the rest of the network and still be capable of transmitting and receiving data from the central network nodes.

VI. Conclusion

Our project has demonstrated a basic system that utilizes a laser beam as the method of communication. As a proof of concept, we have accomplished what we set out to do. The laser communication system can pass data via laser pulses over air, and transmit that data as a byte up to the Intel XScale platform. The Intel XScale platform then can utilize the data and reconstruct the data sequence that was sent from the transmitter.

Because of the versatility in this setup, we could possibly send over a wide range of data, supporting a wide range of networks. For example, IP over laser would be possible using our setup. Currently, we support data communication and data commands, but this could easily be expanded upon, once a more precise interface is developed.

We have also shown that the power consumption of such a network is minimal compared to an RF network. For certain types of wireless networks, a laser based communication structure could possibly make sense.

Much future work still needs to be done however. One optimization would be to improve both the speed and bandwidth of the transmissions. Currently, the speed of transmission is not fast enough for any industrial application. Possible solutions would be to rework the pulse patterns so that data can be transmitted in fewer pulses. Reliability would also need to be improved, and developing a more mature network stack such as the TCP/IP + Ethernet network protocols would be essential [16].

VI. References

1. I. Kim et al., "Wireless optical transmission of fast ethernet, FDDI, ATM, and ESCON protocol data using the TerraLink laser communication system," *Optical Engineering*, Vol. 37 No. 12, December 1998 3155.
2. H. Zimmermann, "OS1 Reference Model-The IS0 Model of Architecture for Open Systems Interconnection," *IEEE Transactions on Communications*, Vol. Com-28, No. 4, April 1980.
3. S. Arnon and N. S. Kopeika, "Laser Satellite Communication Network – Vibration Effect and Possible Solutions," Proceedings of the IEEE, Vol. 85, No. 10, October 1997.
4. LightPointe :: Outdoor Wireless -- Point-To-Point Connectivity Solutions <http://www.lightpointe.com/home.cfm>
5. F. L. Lewis, "Wireless Sensor Networks," *Smart Environments: Technologies, Protocols, and Applications* ed. D.J. Cook and S.K. Das, John Wiley, New York, 2004.
6. Laser < http://en.wikipedia.org/wiki/Laser>
7. Datasheet: Texas Instruments MSP430F448 Microcontroller
8. Datasheet: Maxim MAX3221-MAX3243 RS232 Transceiver
9. Datasheet: Opto Semiconductors Pulsed Laser Diode
10. Datasheet: Intel XScale Core Developer's Manual
11. Bosch, Thierry and Lescure, Marc, "Laser Distance Measurements," PIE Milestone Series, Bellingham SPIE Optical Engineering Press, 1995.
12. http://www.microcontroller.com/Embedded.asp?did=126
13. Zigbee < http://en.wikipedia.org/wiki/Zigbee >
14. I.F. Akyildiz, W. Su, Y. Sankarasubramaniam, and E. Cayirci, "Wireless Sensor Networks: A Survey," Broadband and Wireless Networking Laboratory, School of Electrical and Computer Engineering, Georgia Institute of Technology, Atlanta, GA 30332, USA, December 2001.
15. Anderson, Jon; Manchester, James S; Rodriguez-Moral, Antonio; Veeraraghavan, Malathi, "Protocols and architectures for IP optical networking," BELL LABS TECH J. Vol. 4, no. 1, pp. 105-124. 1999.
16. Ethernet http://en.wikipedia.org/wiki/Ethernet
17. R. Draves, J. Padhye, B. Zill, "Routing in multi-radio, multi-hop wireless mesh networks," International Conference on Mobile Computing and Networking, P. 114-128. 2004.
18. Y. Wei, J Heidermann, D. Estrin, "An Energy-Efficient MAC Protocol for Wireless Sensor Networks," INFOCOM 2002. Twenty-First Annual Joint Conferences of the IEEE Computer and Communications Societies. Proceedings. IEEE, P 1567 – 1576. 2002.